Service Manual

SR3000 /N1B, /U1B

SR4000 /K1B, /K1G, /N1B, /U1B

AV Surround Receiver

SR3000

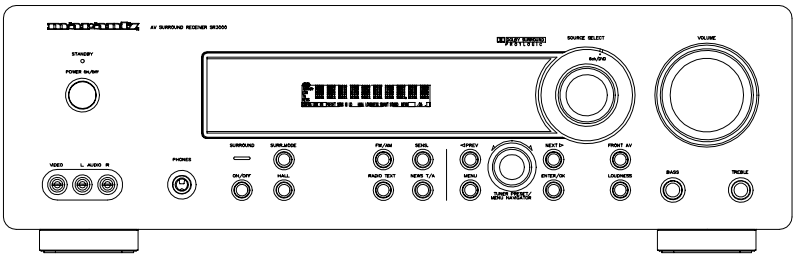

SR4000

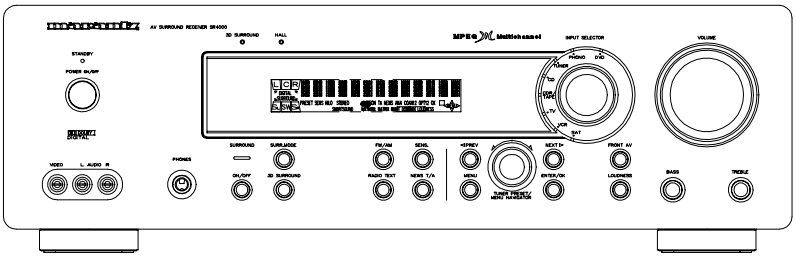

SR3000/SR4000

TABLE OF CONTENTS

SECTION	PAGE
1. LOCATION OF PRINTED CIRCUIT BOARDS/VERSION VARIATIONS	1-1
2. TECHNICAL SPECIFICATION	1-3
3. SERVICE TOOL/MEASUREMENT SET UP/SAFETY	1-5
4. WARNING/HANDLING CHIP COMPONENTS	1-6
5. DISMANTLING HINTS	2-1
6. ABREVIATIONS	2-2
7. WIRING DIAGRAM	3-1
8. BLOCK DIAGRAM	4-1
9. SERVICE TEST PROGRAM	5-1
10. FRONT BOARD	6-1
11. TUNER BOARD ECO5	7B-1
12. TUNER 95 BOARD	7D-1
13. DOLBY PROLOGIC BOARD	8-1
14. MULTI-CHANNEL DECODING MODULE	9-1
15. MAINS BOARD	10-1
16. MONO BOARD	11-1
17. EXPLODED VIEW	12-1
18. ELECTRICAL PARTS LIST MONO BOARD	13-1

Please use this service manual with referring to the user guide (D.F.U) without fail.

marantz®

SR3000 / SR4000

283W855010 ACT
3120 785 22200
First Issue:2000.03

MARANTZ DESIGN AND SERVICE

Using superior design and selected high grade components, **MARANTZ** company has created the ultimate in stereo sound. Only original **MARANTZ** parts can insure that your **MARANTZ** product will continue to perform to the specifications for which it is famous.

Parts for your **MARANTZ** equipment are generally available to our National Marantz Subsidiary or Agent.

ORDERING PARTS :

Parts can be ordered either by mail or by Fax.. In both cases, the correct part number has to be specified.

The following information must be supplied to eliminate delays in processing your order :

1. Complete address
2. Complete part numbers and quantities required
3. Description of parts
4. Model number for which part is required
5. Way of shipment
6. Signature : any order form or Fax. must be signed, otherwise such part order will be considered as null and void.

USA
MARANTZ AMERICA, INC.
440 MEDINAH ROAD
ROSELLE, ILLINOIS 60172
USA
PHONE : 630 - 307 - 3100
FAX : 630 - 307 - 2687

EUROPE / TRADING
MARANTZ EUROPE B.V.
P.O.BOX 80002, BUILDING SFF2
5600 JB EINDHOVEN
THE NETHERLANDS
PHONE : +31 - 40 - 2732241
FAX : +31 - 40 - 2735578

BRAZIL
PHILIP DA AMAZONIA IND. ELET. ITDA
CENTRO DE INFORMACOES AO
CEP 04698-970
SAO PAULO, SP, BRAZIL
PHONE : 0800 - 123123(Discagem Direta Gratuita)
FAX : +55 11 534. 8988

PROFESSIONAL **AMERICAS**
SUPERSCOPE TECHNOLOGIES, INC.
MARANTZ PROFESSIONAL PRODUCTS
2640 WHITE OAK CIRCLE, SUITE A
AURORA, ILLINOIS 60504 USA
PHONE : 630 - 820 - 4800
FAX : 630 - 820 - 8103

PROFESSIONAL **AUSTRALIA**
TECHNICAL AUDIO GROUP PTY, LTD
558 DARLING STREET,
BALMAIN, NSW 2041,
AUSTRALIA
PHONE : 61 - 2 - 9810 - 5300
FAX : 61 - 2 - 9810 - 5355

CANADA
LENBROOK INDUSTRIES LIMITED
633 GRANITE COURT,
PICKERING, ONTARIO L1W 3K1
CANADA
PHONE : 905 - 831 - 6333
FAX : 905 - 831 - 6936

AUSTRALIA
JAMO AUSTRALIA PTY LTD
1 EXPO COURT, P.O. BOX 350
MT. WAVERLEY VIC 3149
AUSTRALIA
PHONE : +61 - 3 - 9543 - 1522
FAX : +61 - 3 - 9543 - 3677

THAILAND
MRZ STANDARD CO.,LTD
746 - 754 MAHACHAI ROAD.,
WANGBURAPAPIROM, PHRANAKORN,
BANGKOK, 10200 THAILAND
PHONE : +66 - 2 - 222 9181
FAX : +66 - 2 - 224 6795

SINGAPORE
WO KEE HONG (S) PTE LTD
WO KEE HONG CENTRE
NO.23, LORONG 8, TOA PAYOH
SINGAPORE 319257
PHONE : +65 2544555
FAX : +65 2502213

NEW ZEALAND
WILDASH AUDIO SYSTEMS NZ
14 MALVERN ROAD MT ALBERT
AUCKLAND NEW ZEALAND
PHONE : +64 - 9 - 8451958
FAX : +64 - 9 - 8463554

TAIWAN
PAI- YUING CO., LTD.
6 TH FL NO, 148 SUNG KIANG ROAD,
TAIPEI, 10429, TAIWAN R.O.C.
PHONE : +886 - 2 - 25221304
FAX : +886 - 2 - 25630415

MALAYSIA
WO KEE HONG ELECTRONICS SDN. BHD.
SUITE 8.1, LEVEL 8, MENARA GENESIS,
NO. 33, JALAN SULTAN ISMAIL,
50250 KUALA LUMPUR, MALAYSIA
PHONE : +60 3 - 2457677
FAX : +60 3 - 2458180

JAPAN *Technical*
MARANTZ JAPAN, INC.
35- 1, 7- CHOME, SAGAMIONO
SAGAMIHARA - SHI, KANAGAWA
JAPAN 228-8505
PHONE : +81 42 748 1013
FAX : +81 42 741 9190

日本マランツ株式会社
本　社　〒228-8505
神奈川県相模原市相模大野7-35-1
営業本部　〒150-0022
東京都渋谷区恵比寿南1-11-9

KOREA
MK ENTERPRISES LTD.
ROOM 604/605, ELECTRO-OFFICETEL, 16-58,
3GA, HANGANG-RO, YONGSAN-KU, SEOUL
KOREA
PHONE : +822 - 3232 - 155
FAX : +822 - 3232 - 154

SHOCK, FIRE HAZARD SERVICE TEST :

CAUTION : After servicing this appliance and prior to returning to customer, measure the resistance between either primary AC cord connector pins (with unit NOT connected to AC mains and its Power switch ON), and the face or Front Panel of product and controls and chassis bottom.

Any resistance measurement less than 1 Megohms should cause unit to be repaired or corrected before AC power is applied, and verified before it is return to the user/customer.

Ref. UL Standard No. 1492.

In case of difficulties, do not hesitate to contact the Technical Department at above mentioned address.

991207ACT

LOCATION OF PRINTED CIRCUIT BOARDS for SR3000

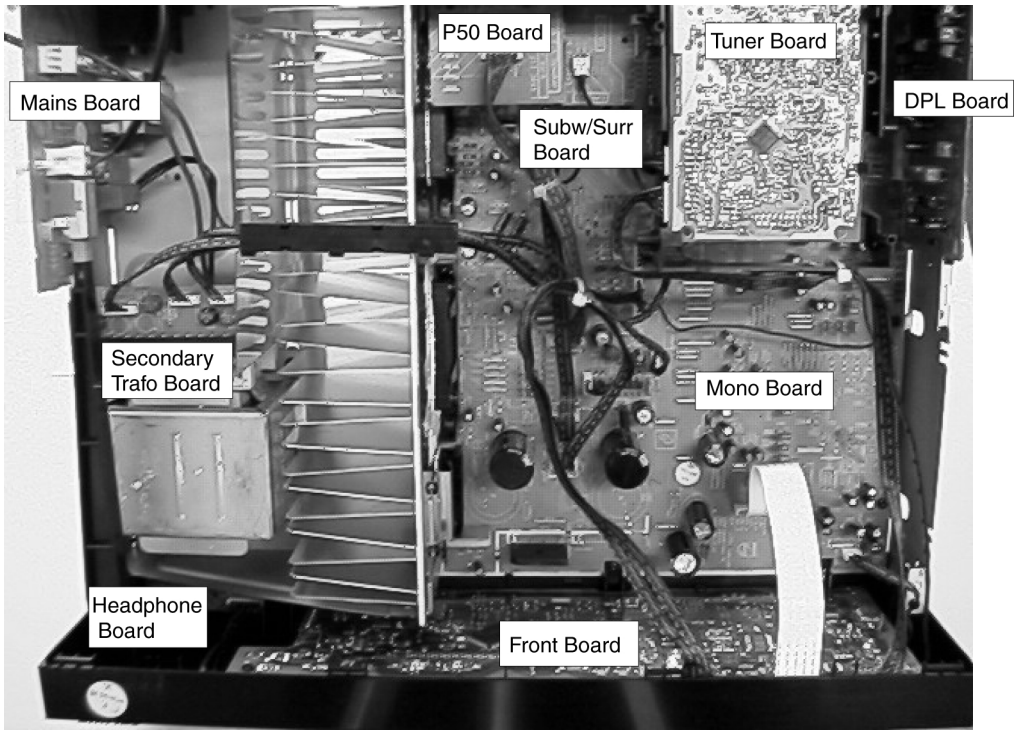

VERSION VARIATIONS

Features & Board in used \ Type & version	SR3000	
	N	U
Tuner board - Tuner 95	x	
Tuner board – ECO 5		x
RDS	x	
P50 code (cinema link)	x	x
# Power channels	4	4
Center Pre-out	x	x
Surround Pre-out	x	x
Mains voltage	230	120

LOCATION OF PRINTED CIRCUIT BOARDS for SR4000

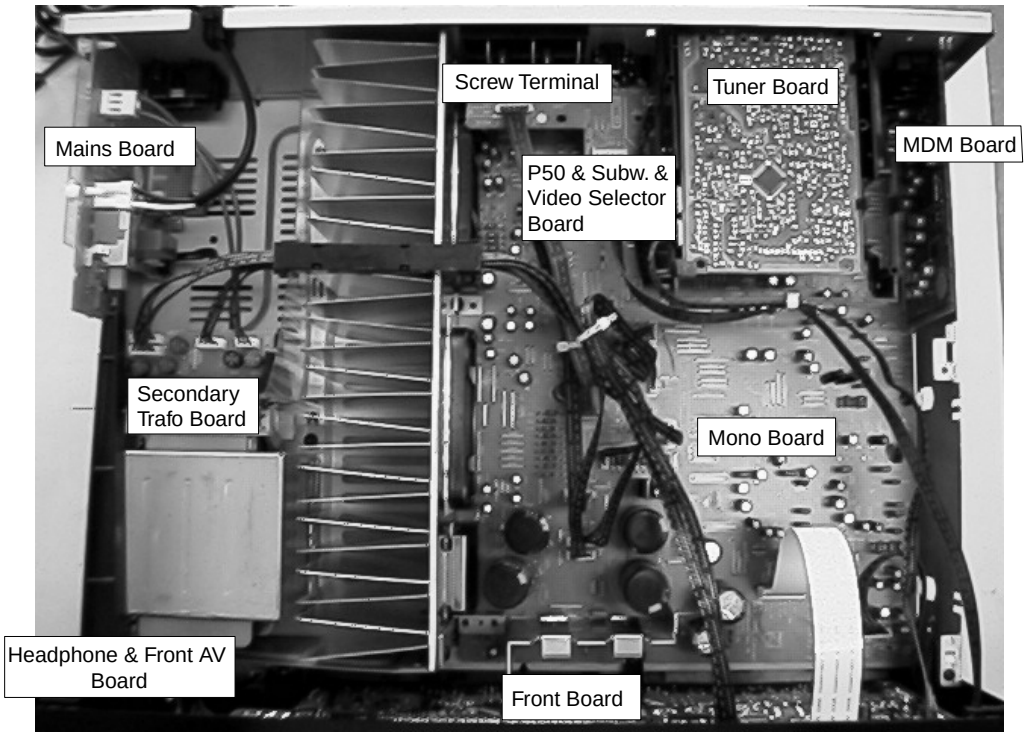

VERSION VARIATIONS

Features & Board in used \ Type & Versions	SR4000		
	N	K	U
Tuner board - Tuner 95	x		
Tuner board – ECO 5		x	x
RDS	x		
P50 code (cinema link)	x	x	x
AV Front	x	x	x
Video selector	x	x	x
Center pre-out	x	x	x
Subwoofer pre-out	x	x	x
# power channels	5	5	5
Mains voltage	230	120/230	120
Voltage selector		x	

TECHNICAL SPECIFICATION SR3000

General

Mains voltage	:230V for /N
	:120V for /U
Mains frequency	: 50Hz for /N
	: 60Hz for /U
Power concumption	: ≤ 2W at stby
Dimension	: 440x138x350 mm
Remote control	: RC3000SR

Amplifier

Output power	
L+R	: 2x50W at 6Ω D= 0,7% (1kHz)
Center	: 50W at 6Ω D= 0,7% (1kHz)
Surround	: 50W at 2X3Ω D= 0,7% (1kHz)
Distortion (1W)	
40Hz -1kHz -20kHz	: ≤ 0,05%(L,R,C)
	: ≤ 0,2% (Surround ch.)
Headphone	: 6,3mm stereo jack with switch
Crosstalk between source —1kHz	: ≤ -65dB
(1W) 250Hz – 10kHz	: ≤ -60dB
Crosstalk between channels -1kHz	: ≤ -45dB
(1W) 250Hz – 10kHz	: ≤ -40dB
Frequency response	
Left/Right/Center	: ≤ 20Hz – ≥20kHz (-3dB)
Surround channel	: ≤ 100Hz – ≥7kHz (-3dB)
Power stage protection	: Shortcircuit
	: DC (Vout ≥10V)
Temperature	: Transformer (≥140˚ Celcius)
	: Heatsink (≥140˚ Celcius)
Input sensitivity	
CD	: 250mV impedance ≥ 47kΩ
CDR/TAPE	: 250mV impedance ≥ 47kΩ
VCR	: 250mV impedance ≥ 47kΩ
TV	: 250mV impedance ≥ 47kΩ
Output sensitivity	
CDR/TAPE	: 250mV impedance ≤ 1kΩ
VCR	: 250mV impedance ≤ 1kΩ
Output sensitivity (variable)	
Center pre-out	: 800mV impedance ≤ 1kΩ
Surround pre-out	: 800mV impedance ≤ 1kΩ

Equalizer

Loudness	
(volume ≤ -20dB Ref: 1kHz=0dB)	: Bass 100Hz +6 dB
	: Treble 10kHz +3 dB
Tone control (Ref: 1kHz=0dB)	
	: Bass 100Hz -10dB ➔+10dB
	: Treble 10kHz -10dB ➔+10dB

DSC settings		100Hz	1kHz	10kHz
Personal	dB	0	0	0
Movie	dB	+ 4	+2	+4
Speech	dB	- 4	+2	- 2
Music	dB	+ 4	- 2	+2
Multimedia	dB	+ 8	0	+6

Dolby Pro Logic

Stereo bypass from	: Lt , Rt into	Left, Right
Dolby Pro-logic decoding	: Lt , Rt into	Left, Right, Center,
	:	Surround
Dolby 3 stereo decoding	: Lt , Rt into	Left, Center, Right
Dolby Phantom decoding	: Lt , Rt into	Left, Right, Surround
(Phantom = no center speaker)		
Hall	: Lt , Rt into	Left, Surround, Right
Surround delay	: variable	
Center mode	: Large , small	
Testtone		

Tuner

RDS	: Only in /N
FM	
Tuning range	: 87.5 – 108MHz
Grid	: 50kHz for /N
	: 100kHz for /U
IF frequency	: 10.7MHz ±25kHz
Aerial input	: 75 Ω coaxial
Sensitivity at 26dB S/N	: ≤ 7µv
Selectivity at 600kHz bandwidth	: ≥ 50dB
Inmage rejection	: ≥ 25dB [75dB]
Distortion at RF=1mV,dev.75kHz	: ≤ 3% [2%]
-3dB Limiting point	: ≤ 7µV
Crosstalk at RF=1mV,dev.40kHz	: ≥18dB [26dB]
MW	
Tuning range	: 531 - 1602kHz for /N
	: 530 - 1700kHz for /U
Grid	: 9kHz for /N
	: 10kHz for /U
IF frequency	: 450kHz ±1kHz
Aerial input	: Loop
Sensitivity at 26dB S/N	: ≤ 4.0mV/m
Selectivity at 18kHz bandwidth	: ≥ 18dB
IF rejection	: ≥ 45dB
Inmage rejection	: ≥ 28dB
Distortion at RF=50mV,m=80%	: ≤ 5%
LW only in /N	
Tuning range	: 153 - 279kHz
Grid	: 3kHz
IF frequency	: 450kHz ±1kHz
Aerial input	: Loop
Sensitivity at 26dB S/N	: ≤ 7.0mV/m
Selectivity at 18kHz bandwidth	: ≥ 24dB
IF rejection	: ≥ 26dB
Inmage rejection	: ≥ 35dB
Distortion at RF=50mV,m=80%	: ≤ 5%

[...] Values indicated are for “Tuner 95 Board” only
* Setting is software controlled

TECHNICAL SPECIFICATION SR4000

General

Mains voltage	:230V for /N
	:110V/240V switchable for /K
	: 120V for /U
Mains frequency	: 50Hz for /N
	: 50/60Hz for /K
	: 60Hz for /U
Power concumption	: ≤ 2W at stby
Dimension. wxhxd	: 440x138x350 mm
Remote control	: RC4000SR

Amplifier

Output power	
L+R	: 2x100W at 6Ω D= 0,7% (1kHz)
Center	: 100W at 6Ω D= 0,7% (1kHz)
Surround Left	: 50W at 6Ω D= 0,7% (1kHz)
Surround Right	: 50W at 6Ω D= 0,7% (1kHz)
Distortion (5W)	
40Hz -1kHz	: ≤ 0,05%
20kHz	: ≤ 0,2%
Headphone	: 6,3mm stereo jack with switch
Crosstalk between source (1W) —1kHz	: ≤ -65dB
250Hz – 10kHz	: ≤ -60dB
Crosstalk between channels (1W) -1kHz	: ≤ -45dB
250Hz – 10kHz	: ≤ -40dB
Frequency response	: ≤ 20Hz – ≥ 20kHz (-3dB)
Power stage protection	: Shortcircuit
	: DC (Vout ≥ 10V)
Temperature	: Transformer (≥140˚ Celcius)
	: Heatsink (≥ 140˚ Celcius)
Input sensitivity	
Phono	: 5mV impedance 47kΩ/220pF
CD	: 250mV impedance ≥ 47kΩ
CDR/TAPE	: 250mV impedance ≥ 47kΩ
VCR	: 250mV impedance ≥ 47kΩ
TV	: 250mV impedance ≥ 47kΩ
SAT	: 250mV impedance ≥ 47kΩ
FRONT AV	: 250mV impedance ≥ 22kΩ
Output sensitivity	
CDR/TAPE	: 250mV impedance ≤ 1kΩ
VCR	: 250mV impedance ≤ 1kΩ
Output sensitivity (variable)	
Subwoofer pre-out	: 800mV impedance ≤ 1kΩ
Center pre-out	: 800mV impedance ≤ 1kΩ

Video Selector

Input sensitivity	
DVD/VCR/TV/Front AV	: 1 Vpp impedance 75Ω
Output sensitivity	
Monitor/VCR	: 1 Vpp impedance 75Ω
Frequency response	: ≤ 50Hz → ≥ 6MHz

Equalizer

Loudness	
(volume ≤ -20dB Ref: 1kHz=0dB)	: 100Hz +6 dB
	: 10kHz +3 dB
Tone control (Ref: 1kHz=0dB)	
	: Bass 100Hz -9dB →+9dB
	: Treble 10kHz -9dB →+9dB

DSC settings		100Hz	1kHz	10kHz
Personal	dB	0	0	0
Movie	dB	+ 4	+0	+4
Speech	dB	- 4	+2	- 2
Music	dB	+ 4	- 2	+2
Multimedia	dB	+ 8	0	+6

Multi Channel Decoder

MPEG5.1 / MPEG 7.1 (7.1 downmix to 5.1)
Dolby Digital (AC-3)
Linear PCM
Automatic audio/data type detection (AC-3,MPEG-2,PCM)
Dolby Pro Logic
MPEG-2 dual mono channel selection I/II
MPEG-2 dual stereo channel selection I/II
Virtual Dolby Surround (422/423)
Virtual MPEG Digital (522/523)
Virtual Dolby Digital (522/523)
Digital Bass Management
Parallel Stereo Downmix
Four Stereo (224)
Volume Control
Noise Generator (test tone)
Surround mode selector
Delay C and SL and SR

Tuner

RDS	: Only in /N
FM	
Tuning range	: 87.5 – 108MHz
Grid	: 50kHz
	: 100kHz only for /U
	: 50 & 100kHz for /K
IF frequency	: 10.7MHz ±25kHz
Aerial input	: 75 Ω coaxial
	: 300 Ω clickfit only for /U
Sensitivity at 26dB S/N	: ≤ 7µv
Selectivity at 600kHz bandwidth	: ≥ 50dB
Image rejection	: ≥ 75dB
	: ≥ 25dB only for /U, K
Distortion at RF=1mV,dev.75kHz	: ≤ 2%
	: ≤ 3% only for /U, K
-3dB Limiting point	: ≤ 7µV
Crosstalk at RF=1mV,dev.40kHz	: ≥ 26dB
	: ≥ 22dB only for /U, K
MW	
Tuning range	: 522 - 1611kHz for /N
	: 531 - 1602kHz for/K
	: 530 - 1700kHz for/K
	: 530 - 1700kHz for /U
Grid	: 9kHz for /N
	: 9 & 10kHz for /K
	: 10kHz for /U
IF frequency	: 450kHz ±1kHz
Aerial input	: Loop
Sensitivity at 26dB S/N	: ≤ 4.0mV/m
Selectivity at 18kHz bandwidth	: ≥ 18dB
IF rejection	: ≥ 45dB
Image rejection	: ≥ 28dB
Distortion at RF=50mV,m=80%	: ≤ 5%
LW only in /N	
Tuning range	: 153 - 279kHz
Grid	: 3kHz
IF frequency	: 450kHz ±1kHz
Aerial input	: Loop
Sensitivity at 26dB S/N	: ≤ 6mV/m
Selectivity at 18kHz bandwidth	: ≥ 22dB
IF rejection	: ≥ 26dB
Image rejection	: ≥ 35dB
Distortion at RF=50mV,m=80%	: ≤ 5%

* Setting is software controlled

SERVICE TOOL

Audio Signals Test Disc 1 ..... 4822 397 30184

MEASUREMENT SETUP

Tuner FM

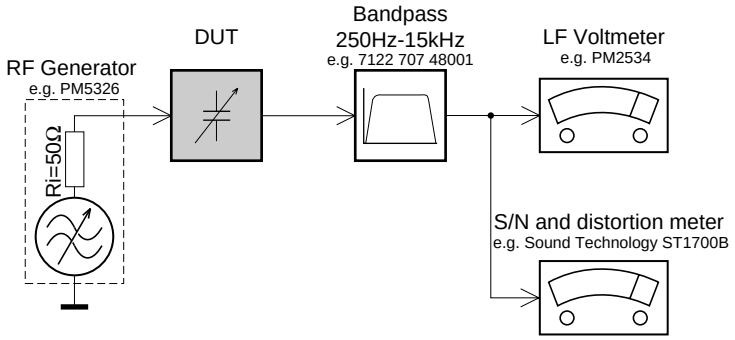

Use a bandpass filter to eliminate hum (50Hz, 100Hz) and disturbance from the pilottone (19kHz, 38kHz).

Tuner AM (MW,LW)

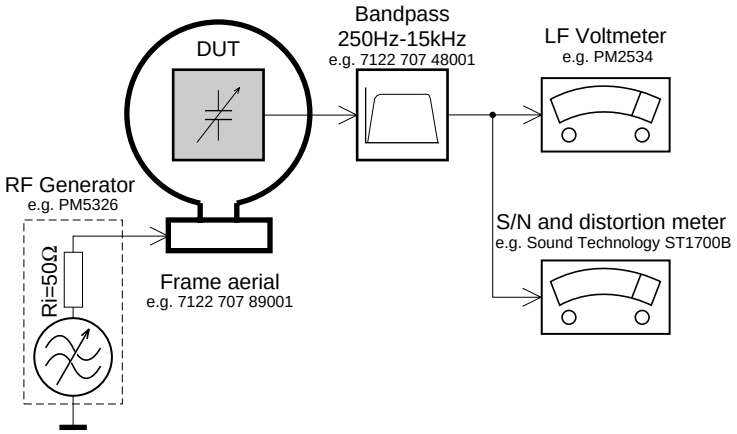

To avoid atmospheric interference all AM-measurements have to be carried out in a Faraday´s cage.
Use a bandpass filter (or at least a high pass filter with 250Hz) to eliminate hum (50Hz, 100Hz).

SAFETY

GB
Safety regulations require that the set be restored to its original condition and that parts which are identical with those specified be used.
Safety components are marked by the symbol ⚠

F
Les normes de sécurité exigent que l`appareil soit remis à l`état d`origine et que soient utilisées les pièces de rechange identiques à celles spécifiées.
Les composants de sécurité sont marqués ⚠

SAFETY

D
Bei jeder Reparatur sind die geltenden Sicherheitsvorschriften zu beachten. Der Originalzustand des Gerätes darf nicht verändert werden. Für Reparaturen sind Originalersatzteile zu verwenden.
Sicherheitsbauteile sind durch das Symbol ⚠ markiert.

NL
Veiligheidsbepalingen vereisen, dat het apparaat in zijn oorspronkeliijke toestand wordt teruggebracht en dat onderdelen, identiek aan de gespecificeerde, worden toegepast.
De Veiligheidsonderdelen zijn aangeduid met het symbool ⚠

I
Le norme di sicurezza estigono che l´apparecchio venga rimesso nelle condizioni originali e che siano utilizzati i pezzi di ricambiago identici a quelli specificati.
Componenty di sicurezza sono marcati con ⚠

WARNING

ESD

(GB) WARNING
All ICs and many other semiconductors are susceptible to electrostatic discharges (ESD). Careless handling during repair can reduce life drastically.
When repairing, make sure that you are connected with the same potential as the mass of the set via a wristband with resistance. Keep components and tools at this potential.

(F) ATTENTION
Tous les IC et beaucoup d´autres semi-conducteurs sont sensibles aux décharges statiques (ESD). Leur longévite pourrait être considérablement écourtée par le fait qu´aucune précaution nést prise à leur manipulation.
Lors de réparations, s´assurer de bien être relié au même potentiel que la masse de l´appareil et enfileer le bracelet serti d´une résistance de sécurité.
Veiller à ce que les composants ainsi que les outils que l´on utilise soient également à ce potentiel.

(D) WARNUNG
Alle ICs und viele andere Halbleiter sind empfindlich gegenüber elektrostatischen Entladungen (ESD).
Unsorgfältige Behandlung im Reparaturfall kann die Lebensdauer drastisch reduzieren.
Sorgen Sie dafür, daß sie im Reparaturfall über ein Puls-armband mit Widerstand mit dem Massepotential des Gerätes verbunden sind.
Halten Sie Bauteile und Hilfsmittel ebenfalls auf diesem Potential.

(NL) WAARSCHUWING
Alle IC´s en vele andere halfgeleiders zijn gevoelig voor electrostatische ontladingen (ESD).
Onzorgvuldig behandelen tijdens reparatie kan de levensduur drastisch doen vermindern. Zorg ervoor dat u tijdens reparatie via een polsband met weerstand verbonden bent met hetzelfde potentiaal als de massa van het apparaat.
Houd componenten en hulpmiddelen ook op ditzelfde potentiaal.

(I) AVVERTIMENTO
Tutti IC e parecchi semi-conduttori sono sensibili alle scariche statiche (ESD).
La loro longevità potrebbe essere fortemente ridatta in caso di non osservazione della più grande cauzione alla loro manipolazione. Durante le riparationi occorre quindi essere collegato allo stesso potenziale che quello della massa delápparecchio tramite un braccialetto a resistenza.
Assicurarsi che i componenti e anche gli utensili con quali si lavora siano anche a questo potenziale.

(GB) AVAILABLE ESD PROTECTION EQUIPMENT :

anti-static table mat	large 1200x650x1.25mm	4822 466 10953
	small 600x650x1.25mm	4822 466 10958
anti-static wristband		4822 395 10223
connection box (3 press stud connections, 1M)		4822 320 11307
extendible cable (2m, 2M , to connect wristband to connection box)		4822 320 11305
connecting cable (3m, 2M , to connect table mat to connection box)		4822 320 11306
earth cable (1M , to connect any product to mat or to connection box)		4822 320 11308
KIT ESD3 (combining all 6 prior products - small table mat)		4822 310 10671
wristband tester		4822 344 13999

HANDLING CHIP COMPONENTS

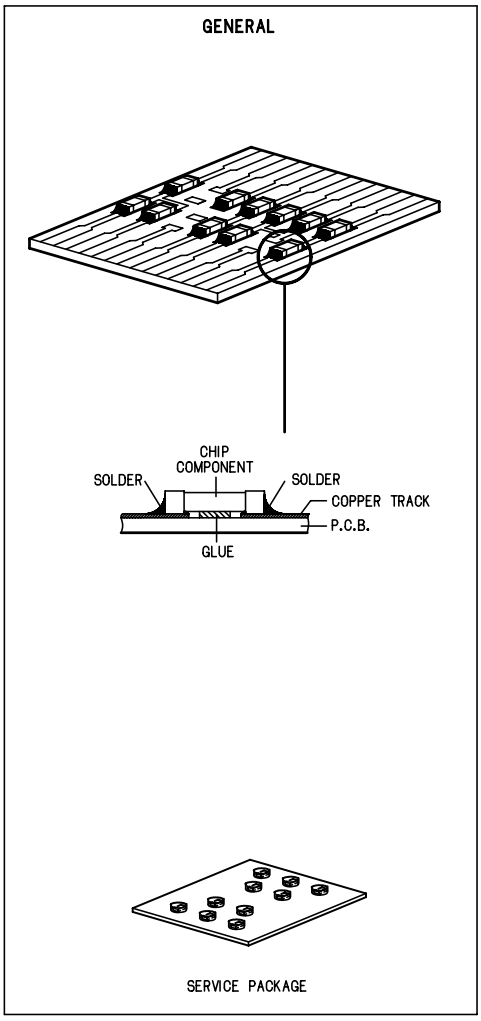

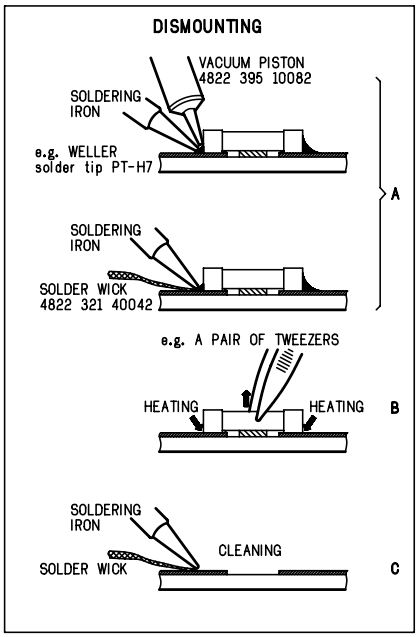

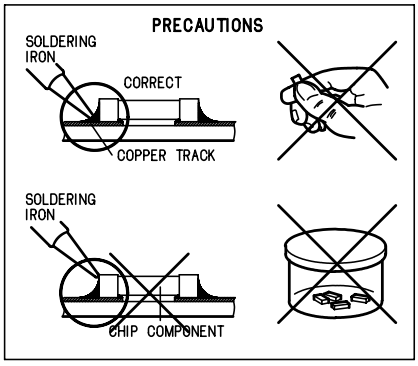

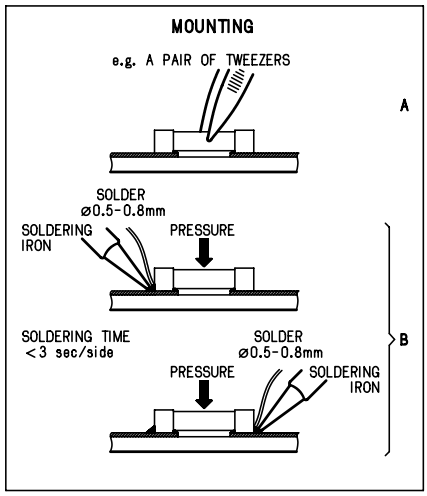

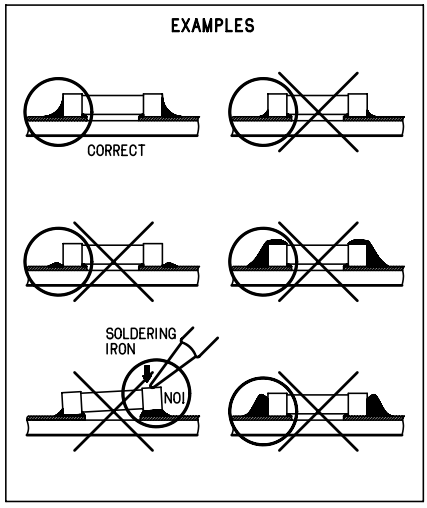

DISMANTLING HINTS

Dismantling of Front

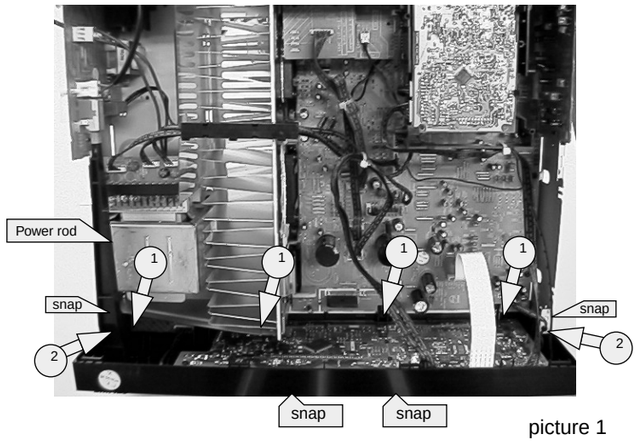

picture 1

1) Remove top cover
2) Remove power rod
3) Remove 6 x screw as shown in picture 1
4) Release two snaps (left & right side front)
5) Release two snaps on the bottom side front
6) Tipp down front as shown in picture 2

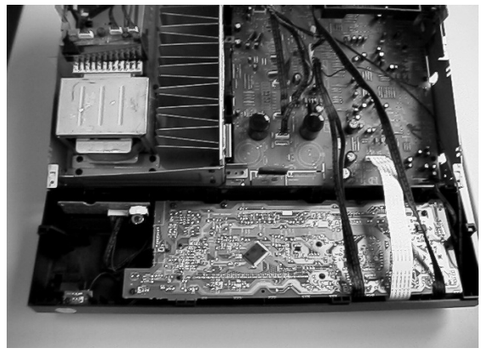

picture 2

Dismantling of mainstrafo

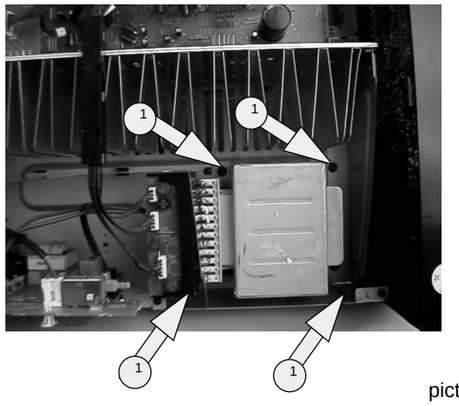

picture 8

1) Remove power rod
2) Remove 4x screw as shown in picture 8

Dismantling of mono board

1) Remove front . See picture 1
2) Remove whole front (disconnect the wires on the mono board coming from front)

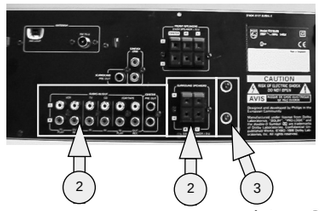

picture 3a
(SR3000)

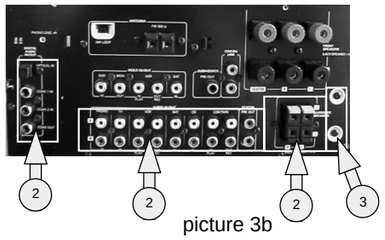

picture 3b
(SR4000)

3) Remove 8 (SR3000) x screws shown in mentionned aria . See picture 3a
3) Remove 12 (SR4000) x screws shown in mentionned aria . See picture 3b

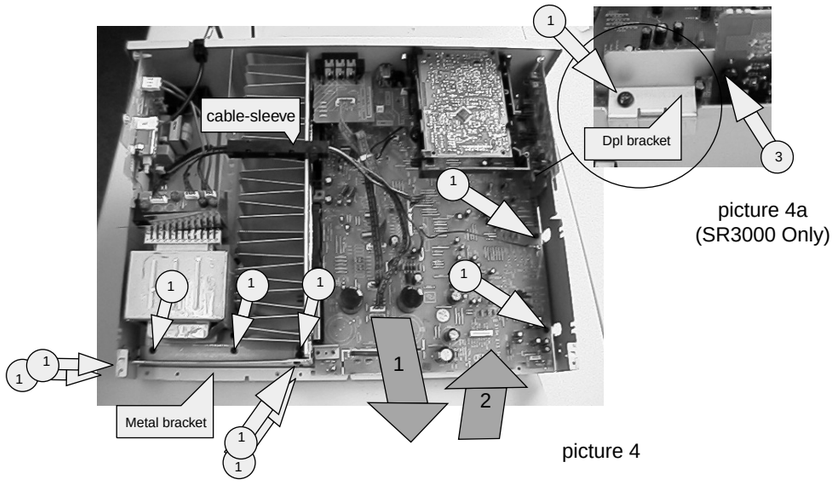

picture 4a
(SR3000 Only)

picture 4

4) Remove DPL bracket. See picture 4a (SR3000 Only)
5) Remove wires out the cable-sleeve.
6) Remove 7 x screw and remove metal bracket
7) Remove 2 x screw on mono board . See pictue 4
8) Remove mono board as shown arrow 1 & 2 . See picture 4
9) Bring the mono board in the service position as shown in picture 5

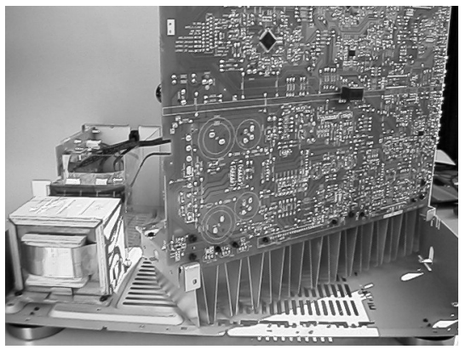

picture 5

Legend

1 = Torx M3x6mm (screw with big head)

2 = Torx 3x10mm

3 = Torx M3x6mm

2-1

Service position monoboard

1) Bring front in position as shown in picture 6
2) Snap nok of front in bottom to make front stable . See picture 7
3) Connect front wiring back to monoboard.
*The tuner module doesn't have to be connected. Use an other source (pe.CD)

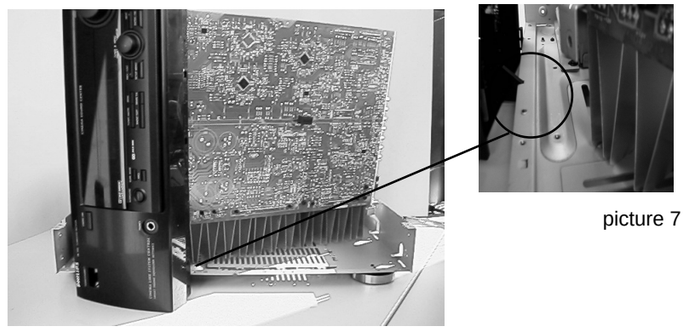

picture 7

picture 6

Service position main trafo

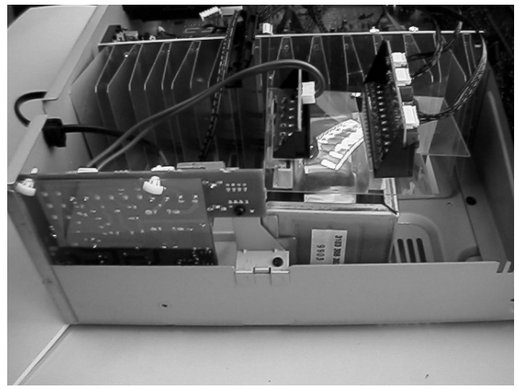

picture 9

1) Put main trafo as shown in picture 9

Handling service cover

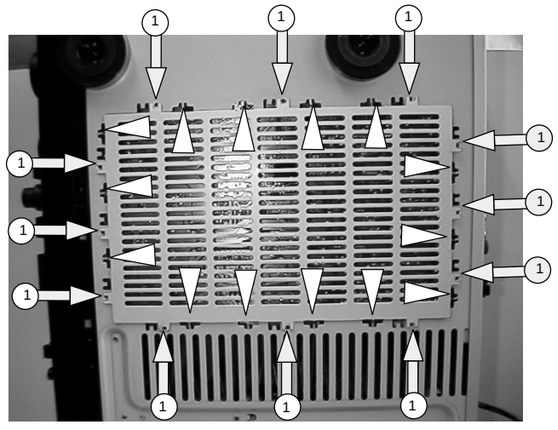

picture 10

1) To open the service cover cut 14 x lugs between cover and bottem . See picture 10 (▽)
2) To close the service cover put 12 x screw in mentionned holes. See picture 10
Service codenumber 12x Torx M3x6mm screw with big head = 4822 502 14659

DISMANTLING HINTS

Dismantling of MDM module (SR4000 Only)

1) Remove all the screws mentionned in the arial . See picture 11

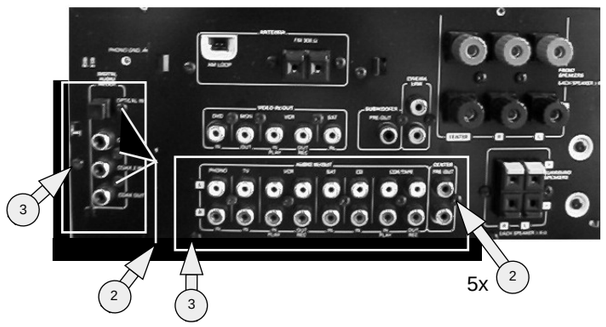

picture11

2) Remove backplate a little backwards. See arrow 1 (picture 12)
3) Pull module out the set as shown in picture 12

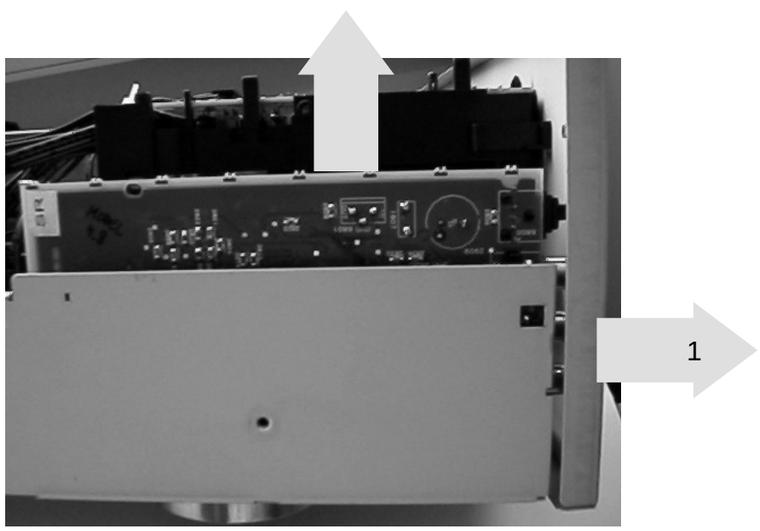

picture12

Legend

1 = Torx M3x6mm (screw with big head)

2 = Torx 3x10mm

3 = Torx M3x6mm

ABBREVIATIONS

A

ac 0VA	AC 0 Voltage
ac 10VB	AC 10 Voltage
ac 110VB	AC 110 Voltage
ac 120VB	AC 120 Voltage
ac gnd	AC ground
ac h1	AC high voltage 1
ac h2	AC high voltage 2
ac l1	AC low voltage 1
ac l2	AC low voltage 2
ac1	AC voltage 1
ac2	AC voltage 2
ac3	AC voltage 3
amp lr on	Amplifier Left - Right On
amp mute c s	Amplifier mute center surround
amp mute c s sub	Amplifier mute center surround subwoofer
amp mute lr	Amplifier mute Left - Right
amp pd	Amplifier power down
amp prot	Amplifier protection
amp s on	Amplifier surround On
amp stby	Amplifier Standby
av gnd	Audio ground
av l	Audio Left
av r	Audio Right
A/V	Audio/Video

D

d gnd	Dolby ground
dd req	Dolby decoder request
dpl c out	Dolbyprologic Center out
dpl clk	Dolbyprologic clock
dpl gnd	Dolbyprologic ground
dpl l in	Dolbyprologic Left in
dpl l out	Dolbyprologic Left out
dpl r in	Dolbyprologic Right in
dpl r out	Dolbyprologic Right out
dpl s	Dolbyprologic surround
dpl sub	Dolbyprologic subwoofer

F

f1	Filament 1
f2	Filament 2
fmute	Fast mute

G

gnd d	Ground digital
gnd s	Ground signal

H

hp gnd	Headphone ground
hp l	Headphone Left
hp on	Headphone On
hp r	Headphone Right
hst	Heatsink temperature

L

ls c	Loudspeaker Center
ls gnd	Loudspeaker ground
ls l	Loudspeaker Left
ls r	Loudspeaker Right

M

mdm	Multi channel Decoding Module
mdm c out	— Center out
mdm gnd	— ground
mdm l dmix	— Downmix Left
mdm l in	— Left in
mdm l out	— Left out
mdm r dmix	— Downmix Right
mdm r in	— Right in
mdm r out	— Right out
mdm req	— request
mdm rst	— reset
mdm scl	— I^2C clock
mdm sda	— I^2C data
mdm sl out	— surround Left out
mdm sr out	— surround Right out
mdm sub out	— subwoofer out
mfd	Mains failure detection

P

p gnd	P50 ground
p p50	Cinema link P50 code

S

s gnd	Surround ground
sofac scl	Sofac I^2C clock
sofac1 sda1	Sofac 1 I^2C data1
sofac2 sda2	Sofac 2 I^2C data2
ss ce	Source selector chipenable
ss clk	Source selector clock
ss data	Source selector data
surr pre-out	Surround pre-out

T

tu clk	Tuner clock
tu da	Tuner data
tu en	Tuner enable
tu gnd	Tuner ground
tu l	Tuner Left
tu r	Tuner Right
tu rds	Tuner RDS
tu stereo	Tuner stereo

V

v gnd	Video ground
v scl	Video I^2C clock
v sda	Video I^2C data
v sig	Video signal
v sub sur	Video subwoofer surround

WIRING DIAGRAM SR3000

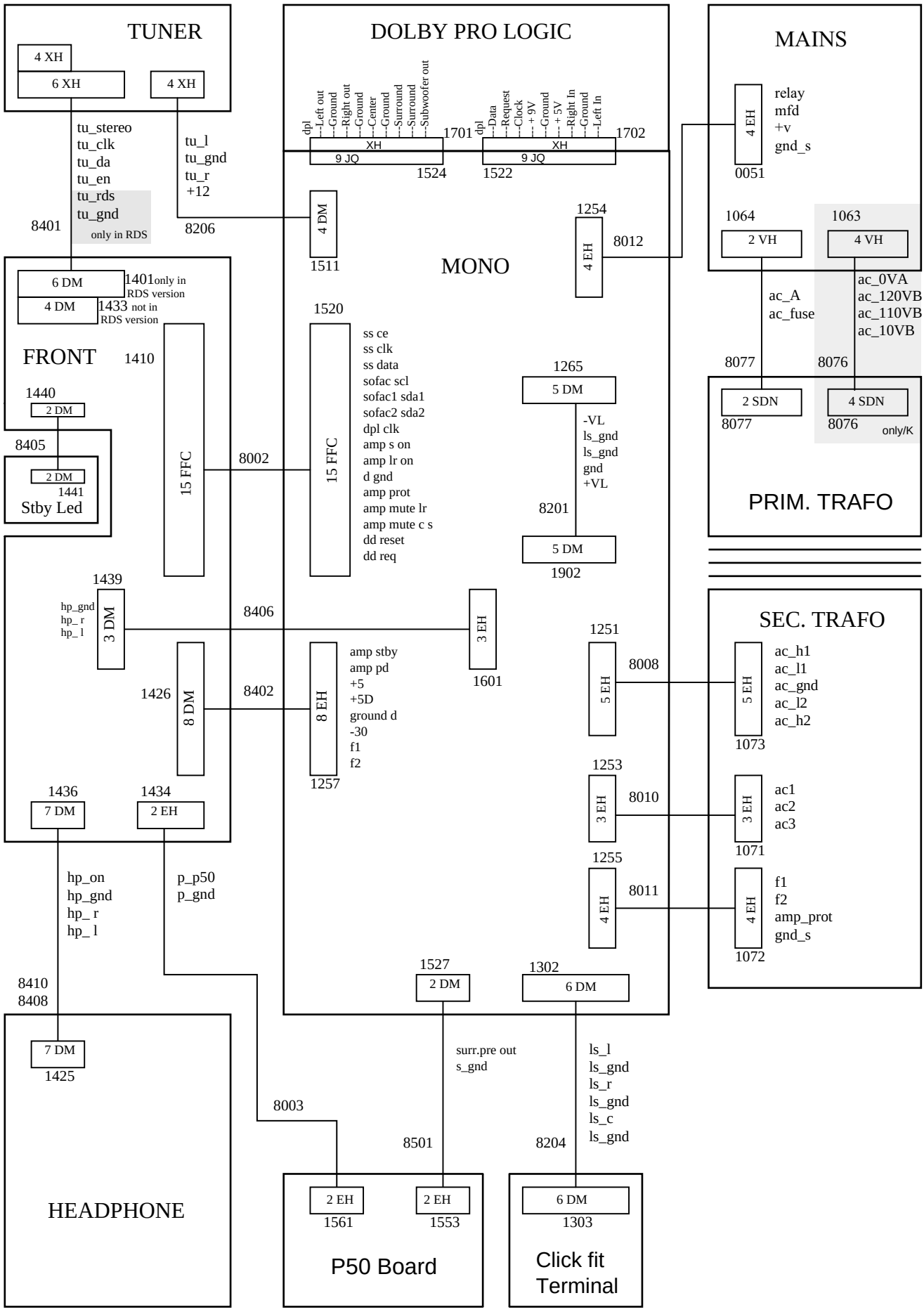

WIRING DIAGRAM SR4000

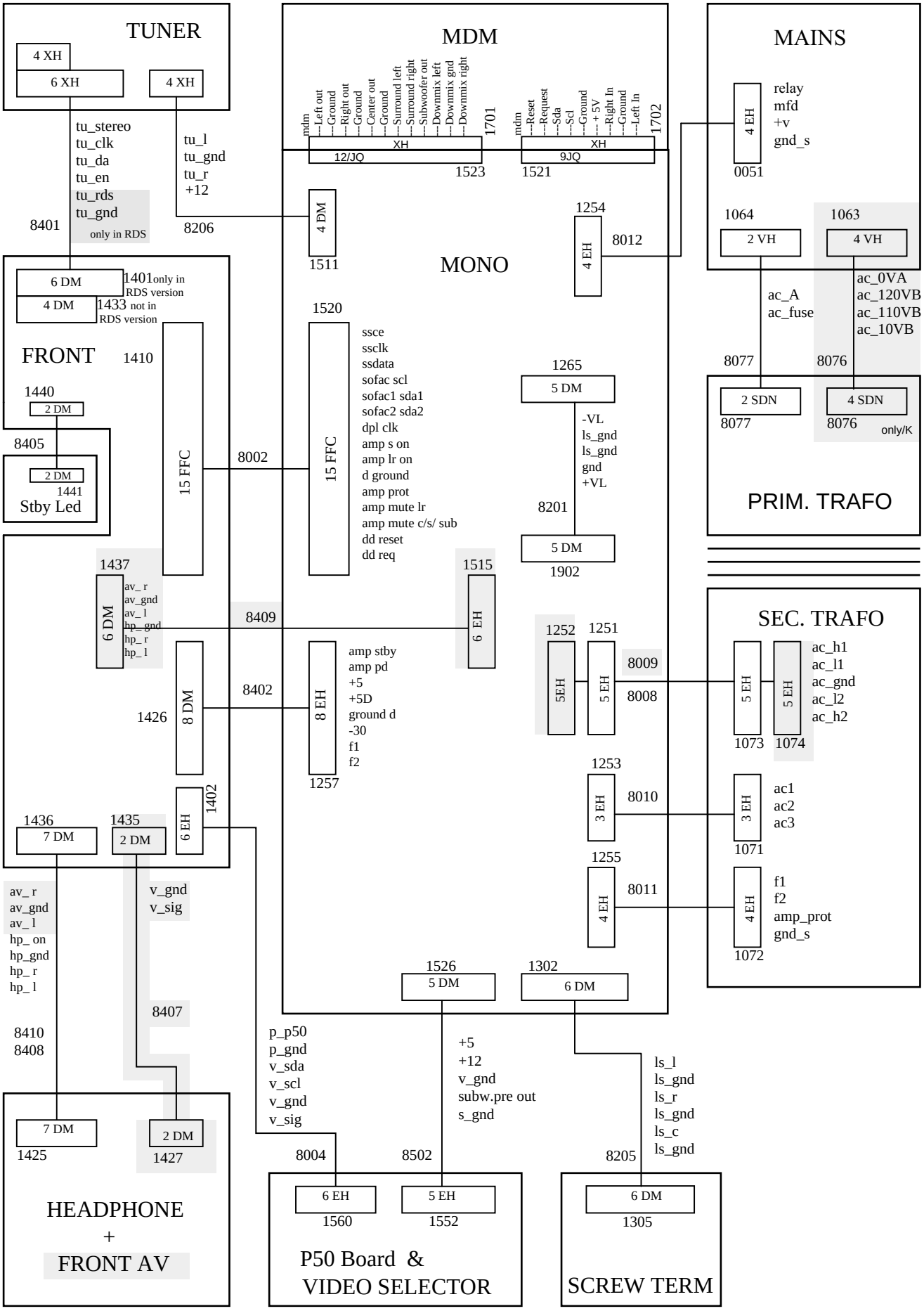

4-1

BLOCK DIAGRAM SR3000

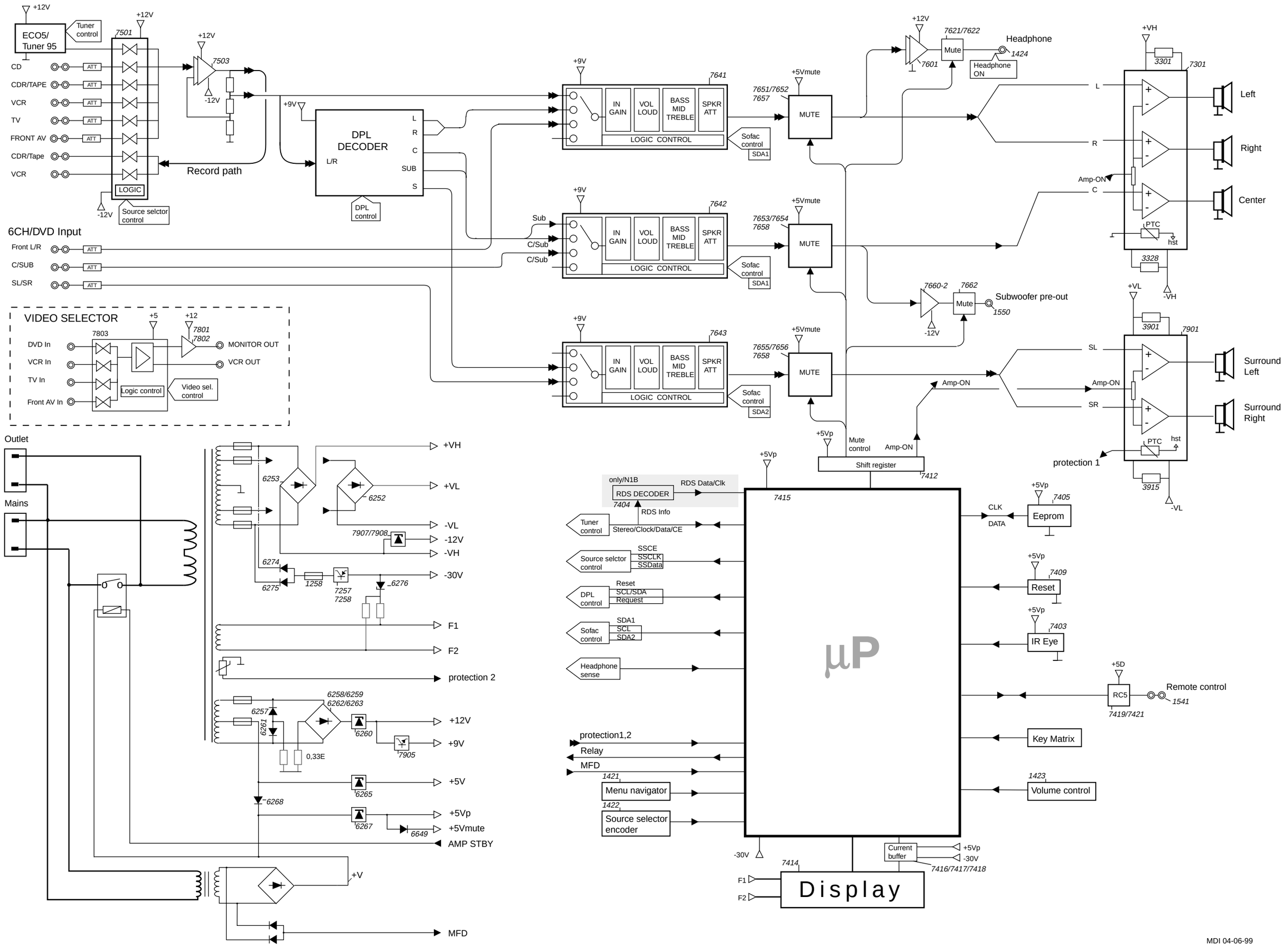

MDI 04-06-99

4-2

BLOCK DIAGRAM SR4000

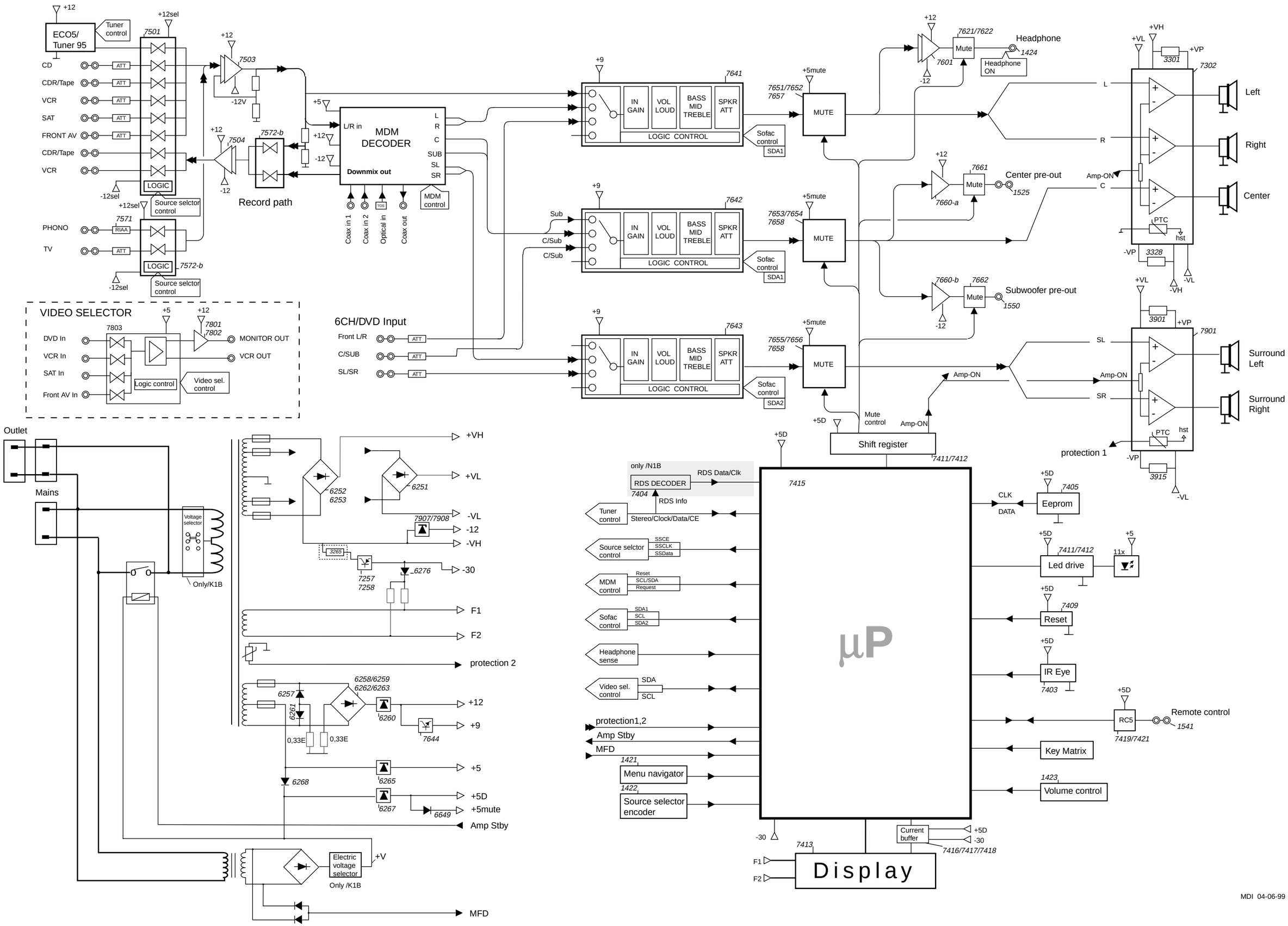

5-1

SERVICE TEST PROGRAM SR3000

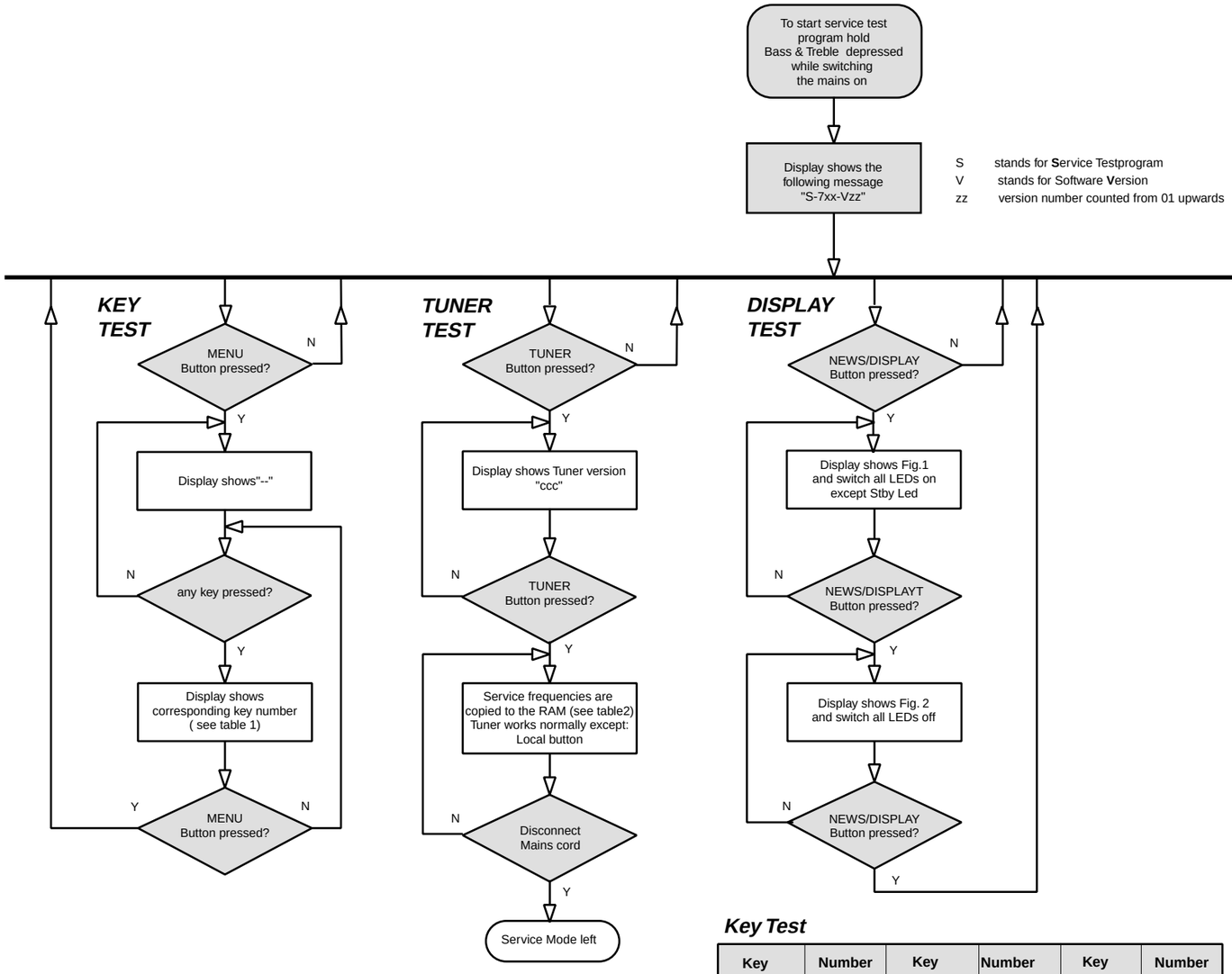

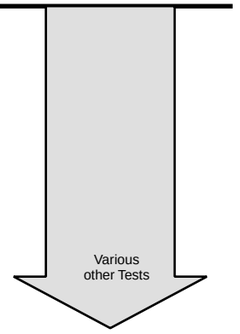

TEST	Activated with	ACTION
EEPROM FORMAT (RESET)	OK Button	Load ***default data.*** Display shows"NEW" for 1 second. **Caution!** **All presets from the customer will be Lost**

Tuner Test

Display info Version	Europe "EUR" /N	USA "USA" /U	Oversea "OSE" /K
Preset 1	87.5MHz	87.5MHz	87.5MHz
2	108MHz	108MHz	108MHz
3	531kHz	530kHz	531kHz
4	1602kHz	1700kHz	1602kHz
5	558kHz	560kHz	558kHz
6	1494kHz	1500kHz	1494kHz
7	153kHz	98MHz	----
8	279kHz	----	----
9	198kHz	----	----
10	98MHz	----	----
11	----	----	98MHz

Table 2

This table is valid for all types of tuners.
Custormer presets will not changed after this Tuner test.
If a station is tuned then the display flag "OK" will be ON otherwise it will be OFF.
If the tuned frequency is carrying RDS information, the display flag "RDS" will be ON.
Oversea version: the tuning grid can be switched between 9kHz and 10kHz by pressing the key "TUNER" for longer then 2 seconds. "Grid 9" or "Grid10" will be shown accordingly.
Grid 9kHz is in FM 50kHz , Grid 10kHz is in FM 100kHz
Europe version: the LW can be switched On and Off by pressing the key "TUNER" for longer than 2 seconds. LW OFF or LW ON will be shown accordingly.

Key Test

Key	Number	Key	Number	Key	Number
		Sens	7	Loudness	13
Surr. on/off	2	*News T/A	8	Bass	14
Surr. Mode	3	Prev.Exit	9	Treble	15
Hall	4	SetupMenu	10	#Front AV	16
Tuner	5	Next	11		
*Radio Text	6	Enter/OK	12		

*Button Radio Text chang in Name/Frequency in /K, /U version
Button News T/A chang in Display in /K version

Table 1

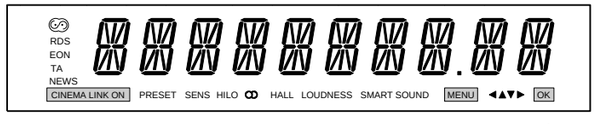

Figure 1

Default Data

Source =Tuner---Mode=stereo---Volume=10
SubwooferVol=0---Left Volume=0---Center Volume=0
Righ Volume=0---RearL Volume=0---RearR Volume=0
Bass=0---Treble=0---Loudness=Off---Smart Sound=Personal
Center Present=Yes---Rear Present=Yes
Center Size=Small---Rear Size=Small
Front Dist = 4 meter---Rear Dist = 2 meter
For /K: AM grid is 9kHz
FM grid is 50kHz

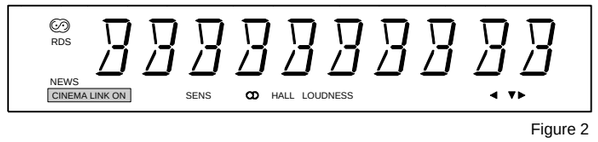

Figure 2

5-2

SERVICE TEST PROGRAM SR4000

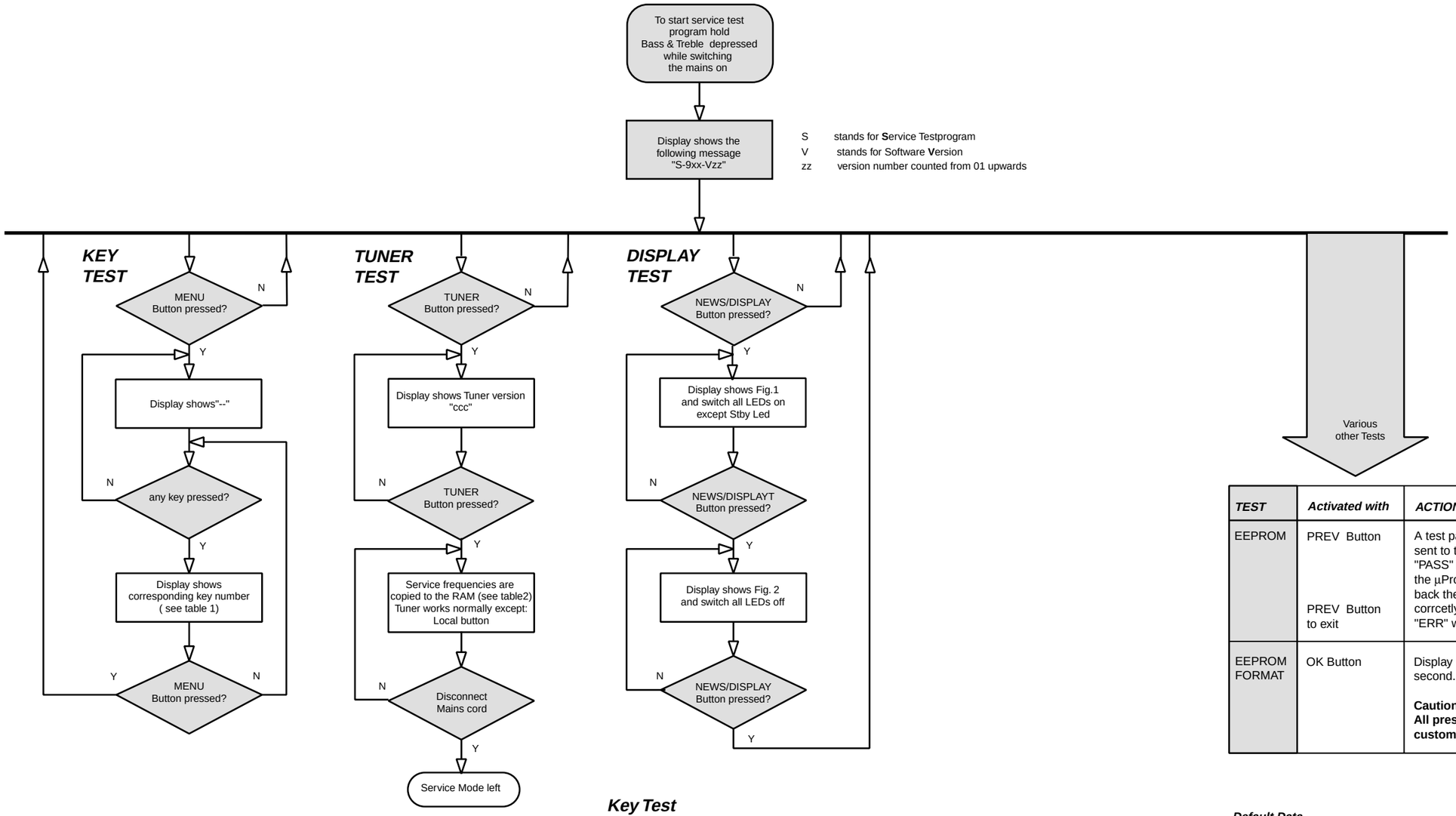

TEST	Activated with	ACTION
EEPROM	PREV Button PREV Button to exit	A test pattern will be sent to the Eeprom. "PASS" is displayed if the µProcessor read back the test pattern corrcetly, otherwise "ERR" will be displayed.
EEPROM FORMAT	OK Button	Display shows"NEW" for 1 second. **Caution!** **All presets from the customer will be Lost**

Tuner Test

Display info Version	Europe "EUR" /N	USA "USA" /U	Oversea "OSE" /K
Preset 1	87.5MHz	87.5MHz	87.5MHz
2	108MHz	108MHz	108MHz
3	531kHz	530kHz	531kHz
4	1602kHz	1700kHz	1602kHz
5	558kHz	560kHz	558kHz
6	1494kHz	1500kHz	1494kHz
7	153kHz	98MHz	----
8	279kHz	----	----
9	198kHz	----	----
10	98MHz	----	----
11	----	----	98MHz

This table is valid for all types of tuners. Table 2
Custormer presets will not changed after this Tuner test.
If a station is tuned then the display flag "OK" will be ON otherwise it will be OFF.
If the tuned frequency is carrying RDS information, the display flag "RDS" will be ON.
Oversea version: the tuning grid can be switched between 9kHz and 10kHz by pressing the key "TUNER" for longer then 2 seconds. "Grid 9" or "Grid10" will be shown accordingly.
Grid 9kHz is in FM 50kHz , Grid 10kHz is in FM 100kHz
Europe version: the LW can be switched On and Off by pressing the key "TUNER" for longer than 2 seconds. LW OFF or LW ON will be shown accordingly.

Key Test

Key	Number	Key	Number	Key	Number
Surr. on/off	2	Sens	7	Enter/OK	12
Surr. Mode	3	*News T/A	8	Loudness	13
3D Surr.	4	Prev.Exit	9	Bass	14
Tuner	5	Setup Menu	- -	Treble	15
*Radio Text	6	Next	11	*Front A/V	16

*Button Radio Text change in Name/Frequency in /K, /U version
Button News T/A change in Display in /K, /U version
Button Front A/V not in FR960

Table 1

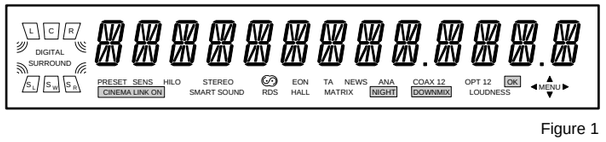

Figure 1

Default Data

Source =Tuner---Mode=stereo---Volume=10---SubwooferVol=0
LeftVolume=0---CenterVolume=0---Righ Volume=0
RaerVolume=0---RearLVolume=0---RearRVolume=0---Bass=0
Treble=0---Loudness=Off---Smart Sound=Personal---Center
Present=Yes---RearPresent=Yes---FrontSize=Large
Subwooferpresent=Yes--- CenterSize=Small---RearSize=Small
EffectIncr3D=100--DigInputCoax1=DVD
L/RDist=4meter---CenterDist=3meter---RearDist=2meter
For USA /17:
L/RDist=13Feet---CenterDist=10Feet---RearDist=7Feet.
For /01: AM grid is 9kHz
: FM grid is 50kHz

Figure 2

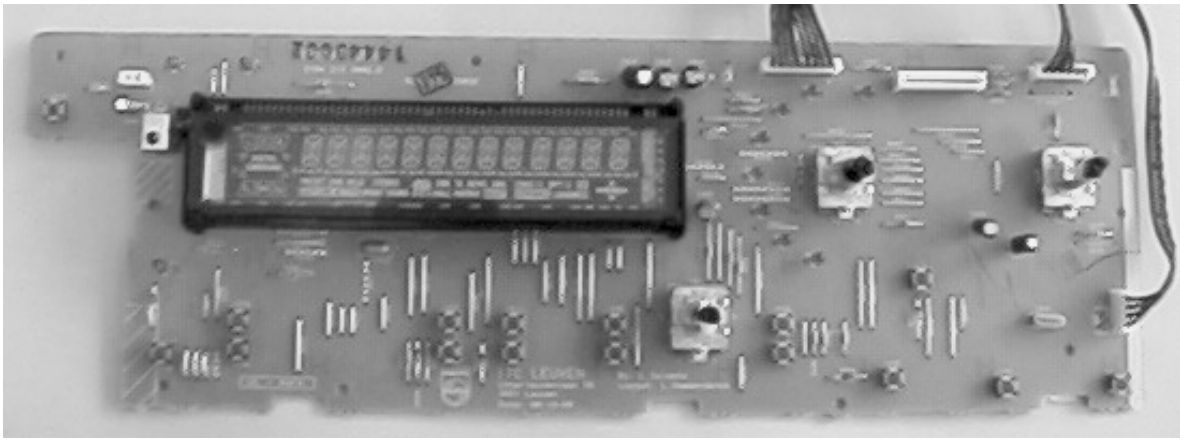

FRONT BOARD

TABLE OF CONTENTS

FTD Display pin connections..... 6-2
Headphone & Led board layout 6-4
Circuit diagram 6-5
Component layout 6-7
Partslist 6-8

FTD DISPLAY PIN CONNECTIONS SR3000

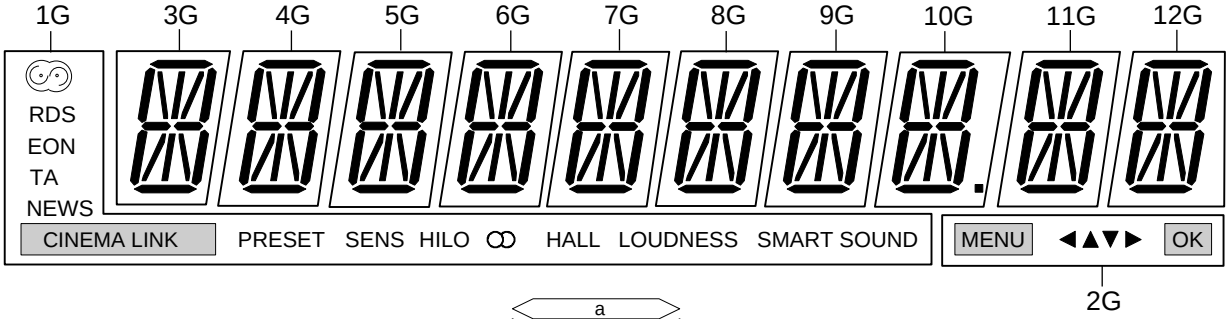

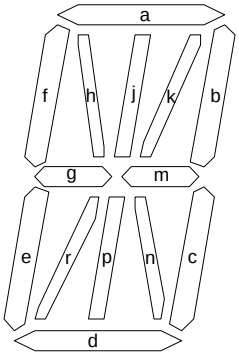

	1G	2G	3G	4G	5G	6G	7G	8G	9G	10G	11G	12G
P1	LOUDNESS	▼	a	a	a	a	a	a	a	a	a	a
P2	-	MENU	j p	j p	j p	j p	j p	j p	j p	j p	j p	j p
P3	-	▶	h	h	h	h	h	h	h	h	h	h
P4	LO	OK	k	k	k	k	k	k	k	k	k	k
P5	CINEMA LINK	◀	b	b	b	b	b	b	b	b	b	b
P6	EON	▲	f	f	f	f	f	f	f	f	f	f
P7	HALL	-	m	m	m	m	m	m	m	m	m	m
P8	HI	-	g	g	g	g	g	g	g	g	g	g
P9	NEWS	-	c	c	c	c	c	c	c	c	c	c
P10	PRESET	-	e	e	e	e	e	e	e	e	e	e
P11	RDS	-	r	r	r	r	r	r	r	r	r	r
P12	SMART SOUND	-	n	n	n	n	n	n	n	n	n	n
P13	∞	-	d	d	d	d	d	d	d	d	d	d
P14	TA	-	-	-	-	-	-	-	-	■	-	-
P15	SENS	-	-	-	-	-	-	-	-	-	-	-

Pin Connection

Pin numbers	45	44	43	42	41	40	39	38	37	36	35	34	33	32	31	30	29	28	27	26	25	24	23	22	21	20	19	18	17	16	15	14	13	12	11	10	9	8	7	6	5	4	3	2	1
Connection	F2	F2	NP	NP	NC	NC	NC	NC	1G	2G	3G	4G	5G	6G	7G	8G	9G	10G	11G	12G	NC	NC	NC	NC	NC	NC	P15	P14	P13	P12	P11	P10	P9	P8	P7	P6	P5	P4	P3	P2	P1	NP	NP	F1	F1

Note: NC ---------- No connection

NP ---------- No pin

FI , F2 ---------- Filament

1G ~ 12G ------ Grid

FTD DISPLAY PIN CONNECTIONS SR4000

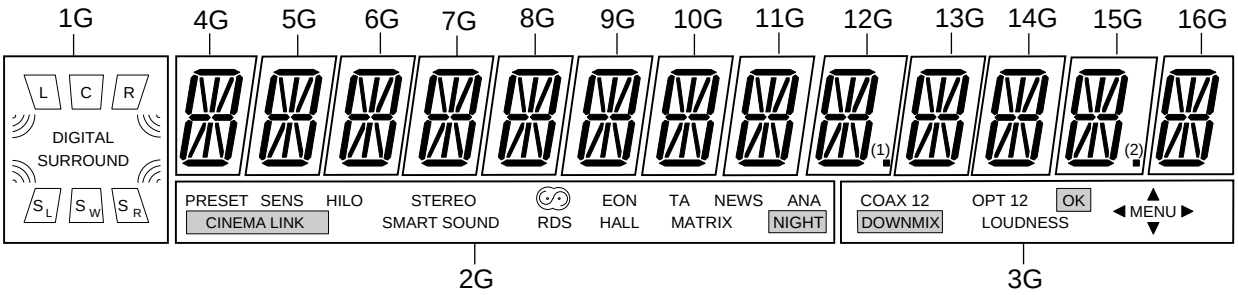

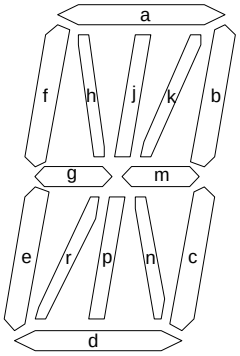

	1G	2G	3G	4G~11G	12G	13G ,14G	15G	16G
P1	L	MATRIX	DOWNMIX	a	a	a	a	a
P2	R	NIGHT	COAX	j p	j p	j p	j p	j p
P3	C	ANA	1(coax)	h	h	h	h	h
P4	(C)	LO	2(coax)	k	k	k	k	k
P5	(S_L)	CINEMA LINK	OPT	b	b	b	b	b
P6	(S_R)	EON	1(opt)	f	f	f	f	f
P7	S_W	HALL	2(opt)	m	m	m	m	m
P8	S (L)	HI	LOUDNESS	g	g	g	g	g
P9	L	NEWS	▼	c	c	c	c	c
P10	S (R)	PRESET	MENU	e	e	e	e	e
P11	R	RDS	▶	r	r	r	r	r
P12		SMART SOUND	OK	n	n	n	n	n
P13		STEREO	◀	d	d	d	d	d
P14	SURROUND	TA	▲	-	■ (1)	-	■ (2)	-
P15	DIGITAL	SENS	-	-	-	-	-	-

Pin Connection

Pin numbers	50	49	48	47	46	45	44	43	42	41	40	39	38	37	36	35	34	33	32	31	30	29	28	27	26	25	24	23	22	21	20	19	18	17	16	15	14	13	12	11	10	9	8	7	6	5	4	3	2	1
Connection	1G	2G	3G	4G	5G	6G	7G	8G	9G	10G	11G	12G	13G	14G	15G	16G	NC	NC	NC	NC	NC	NC	P15	P14	P13	P12	P11	P10	P9	P8	P7	P6	P5	P4	P3	P2	P1	NC	NC	NC	NC	NC	NC	NC	NC	NP	NP	F1	F1

Pin numbers	62	61	60	59	58	57	56	55	54	53	52	51
Connection	F2	F2	NP	NP	NC	NC	NC	NC	NC	NC	NC	NC

Note: FI , F2 --------- Filament
NC ---------- No connection
NP ---------- No pin
1G ~ 16G ----- Grid

HEADPHONE BOARD - COMPONENT VIEW

SR3000

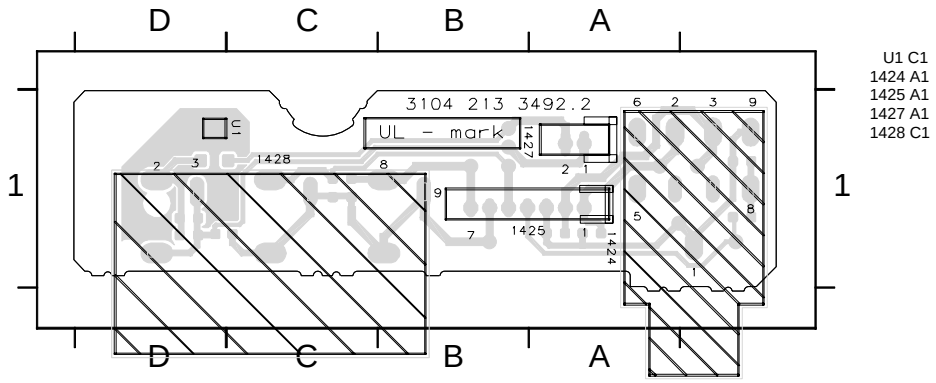

SR4000

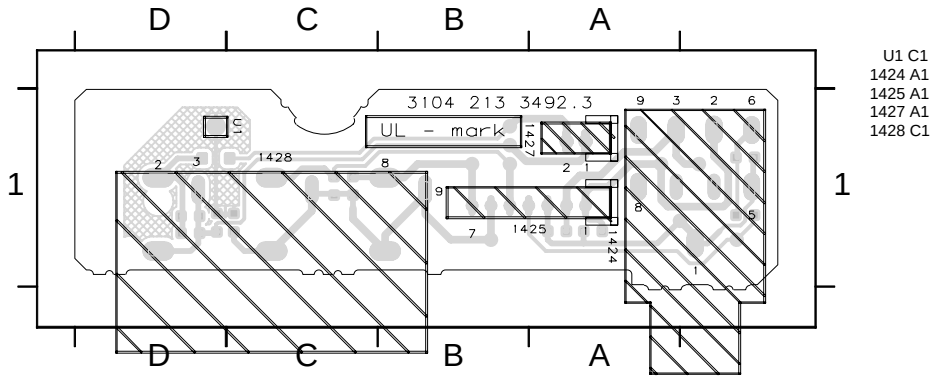

HEADPHONE BOARD - COPPER SIDE VIEW

SR3000

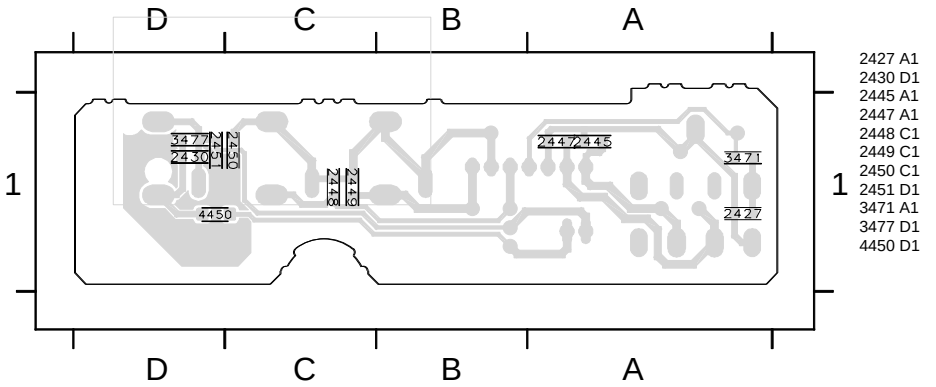

SR4000

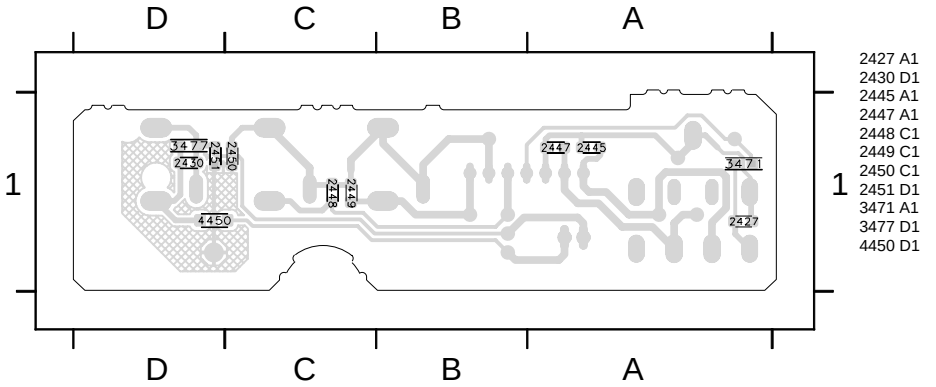

LED BOARD - COMPONENT VIEW

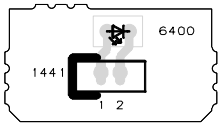

FRONT PART SR3000

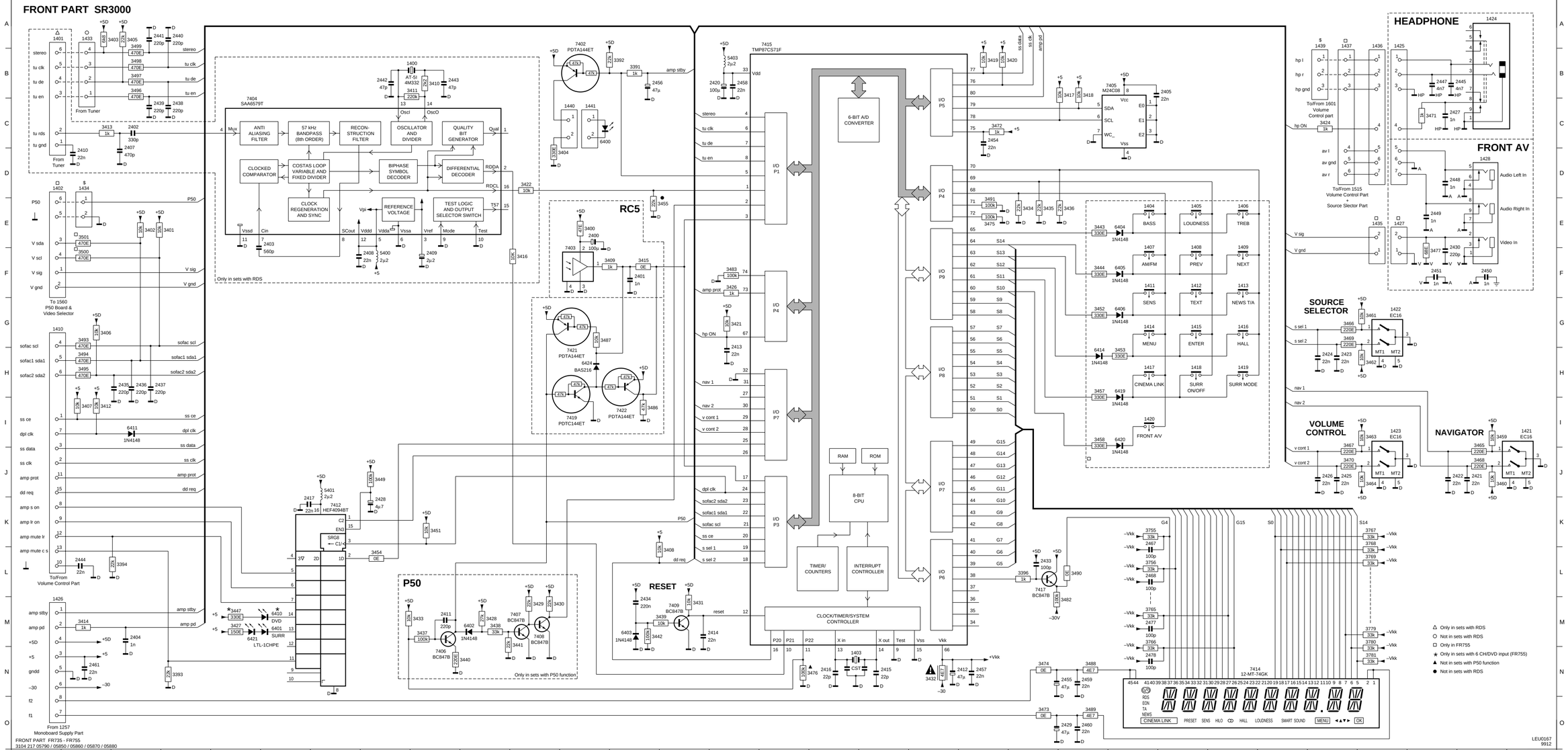

FRONT PART FR735 - FR755
3104 217 05790 / 05850 / 05860 / 05870 / 05880

FRONT PART SR4000

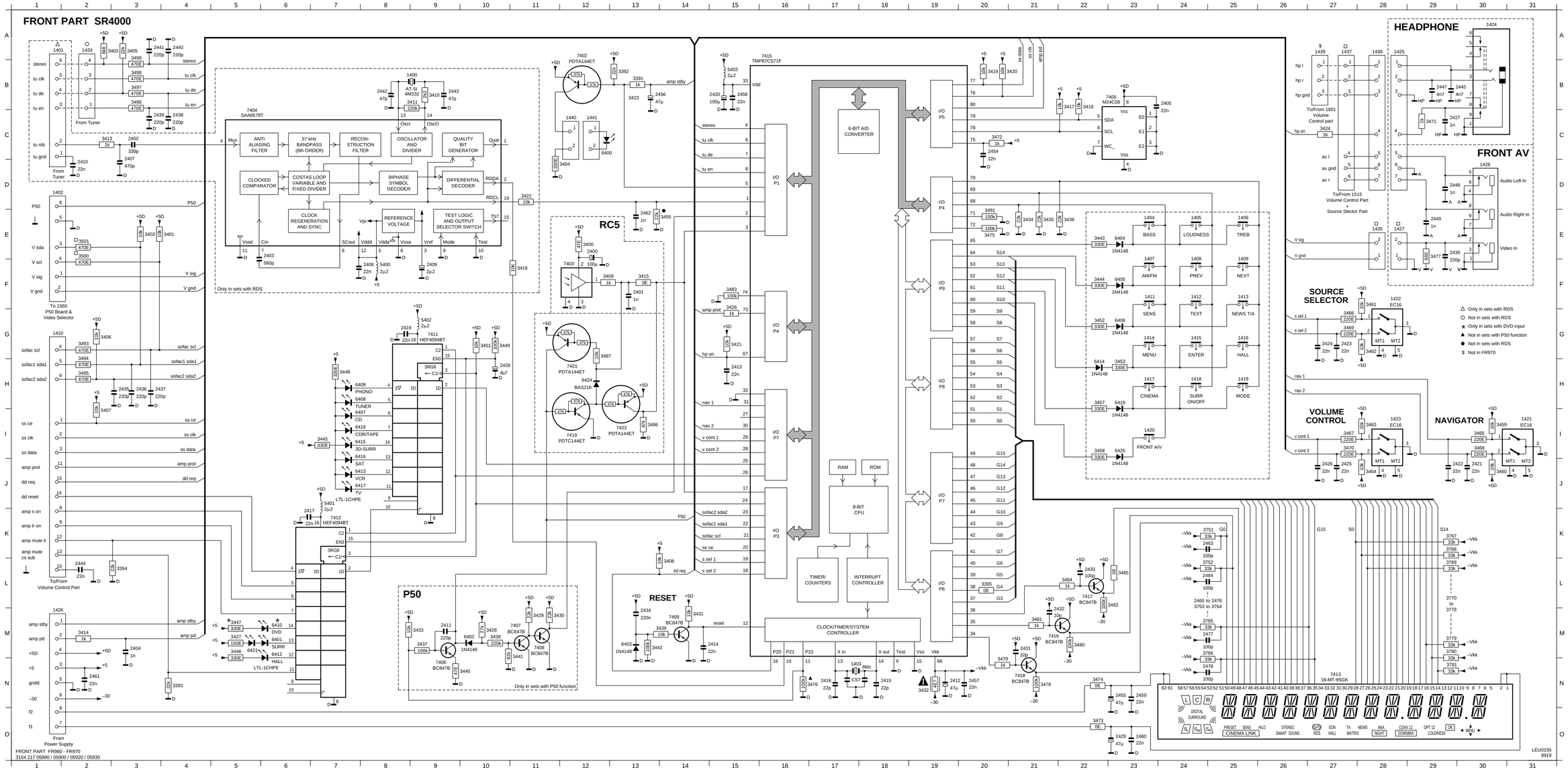

1400	B8	3419	B20	7408	M11		
1401	A1	3420	B20	7409	M14		
1402	D1	3421	G15	7411	G9		
1403	N17	3422	D11	7412	K7		
1404	E23	3423	B13	7413	N27		
1405	E24	3424	C27	7415	A16		
1406	E25	3426	F15	7416	M21		
1407	F23	3427	M5	7417	L22		
1408	F24	3428	M10	7418	N21		
1409	F25	3429	M11	7419	I12		
1410	G1	3430	M11	7421	H12		
1411	F23	3431	M14	7422	I13		
1412	F24	3432	N19				
1413	F25	3433	M9				
1414	G23	3434	E22				
1415	G24	3435	E21				
1416	G25	3436	E22				
1417	H23	3437	M9				
1418	H24	3438	M10				
1419	H25	3439	M13				
1420	I23	3440	N10				
1421	I31	3441	N11				
1422	F28	3442	M13				
1423	I28	3443	E22				
1424	A30	3444	F22				
1425	A28	3445	I7				
1426	M1	3446	M5				
1427	E28	3447	M5				
1428	D30	3448	H7				
1433	A2	3449	G10				
1435	E28	3451	G10				
1436	A28	3452	G22				
1437	A27	3453	H23				
1439	A27	3455	E14				
1440	C12	3457	H22				
1441	C12	3458	I22				
2400	E12	3459	I30				
2401	F13	3460	J30				
2402	C3	3461	F28				
2403	E6	3462	G28				
2404	M3	3463	I28				
2405	B24	3464	J28				
2407	D3	3465	I30				
2408	F8	3466	G27				
2409	F9	3467	I27				
2410	D2	3468	I30				
2411	M9	3469	G27				
2412	N19	3470	I27				
2413	H15	3471	C29				
2414	M14	3472	C20				
2415	N18	3473	O22				
2416	N17	3474	N22				
2417	K6	3475	E20				
2419	G8	3476	N16				
2420	B15	3477	E29				
2421	J30	3478	N21				
2422	J29	3479	N20				
2423	G27	3480	M22				
2424	G27	3481	M21				
2425	J27	3482	L23				
2426	J27	3483	F15				
2427	C29	3484	L22				
2428	H10	3485	L23				
2429	O23	3486	I13				
2430	E29	3487	G12				
2431	M21	3491	E20				
2432	M21	3493	G2				
2433	L22	3494	H2				
2434	M13	3495	H2				
2435	H3	3496	B3				
2436	H3	3497	B3				
2437	H3	3498	B3				
2438	C4	3499	A3				
2439	C3	3500	E2				
2440	A4	3501	E2				
2441	A3	3751	K24				
2442	B8	3752	L24				
2443	B9	3753	M24				
2444	L2	3764	M25				
2445	B29	3765	M24				
2447	B29	3766	M24				
2448	D29	3767	K29				
2449	E29	3768	K29				
2454	C20	3769	L29				
2455	N23	3770	L29				
2456	B13	3778	M29				
2457	N20	3779	M29				
2458	B15	3780	M29				
2459	N23	3781	N29				
2460	O23	5400	F8				
2461	N2	5401	J7				
2462	E13	5402	G9				
2463	K24	5403	B15				
2464	L24	6400	C12				
2465	L24	6401	M6				
2476	L25	6402	M10				
2477	M24	6403	M13				
2478	N24	6404	E23				
3391	B13	6405	F23				
3392	B13	6406	G23				
3393	N4	6407	I7				
3394	L3	6408	H7				
3395	L20	6409	H7				
3400	E12	6410	M6				
3401	E4	6412	M6				
3402	E3	6413	J7				
3403	A2	6414	H22				
3404	D12	6415	I7				
3405	A3	6416	I7				
3406	G2	6417	J7				
3407	I2	6418	I7				
3408	L14	6419	H23				
3409	F12	6420	I23				
3410	B9	6421	M5				
3411	B8	6424	H12				
3413	C2	7402	A12				
3414	M2	7403	F12				
3415	F13	7404	C5				
3416	F11	7405	B22				
3417	B22	7406	N9				
3418	B22	7407	M11				

6-7

FRONT BOARD - COMPONENT & COPPER SIDE VIEW

1400 C9	1407 C4	1414 C5	1421 B6	1434 A9	2409 B9	3401 A9	3412 A9	3436 C7	3457 C2	6401 B2	6408 A7	6415 A2	6422 C2	9403 B4	9410 A1	9417 B8	9424 B6	9431 B7	9439 B8	9447 A8	9454 C8	9462 A5	9471 C2
1401 A9	1408 C5	1415 C2	1422 A7	2412 A6	2417 A6	3402 A9	3413 B9	3443 C7	3488 A2	6402 B2	6409 A7	6416 B7	6423 A2	9404 B3	9411 B4	9418 B8	9425 A6	9432 A7	9440 C8	9448 B8	9455 C7	9463 C8	9472 C2
1402 A9	1409 C7	1416 C2	1423 A9	2420 A6	2424 A6	3404 A1	3424 B6	3444 C4	3489 A6	6403 B3	6410 A7	6417 B7	7403 A2	9405 B3	9412 B5	9419 C6	9426 A6	9433 A6	9442 C8	9449 B8	9456 B3	9464 A8	9473 C2
1403 B4	1410 A8	1417 A1	1426 A7	2428 B8	3405 A9	3426 B6	3447 A6	5400 B9	6404 C7	6411 A8	6418 B7	7413 B4	9406 C3	9413 B5	9420 B6	9427 B5	9434 B7	9443 C8	9450 B8	9457 A2	9465 A8		
1404 C9	1411 C5	1418 C2	1429 C8	2429 A6	3406 B3	3427 B2	3446 A7	5401 B8	6405 C4	6412 A7	6419 C2	7414 B4	9407 C3	9414 B5	9421 A5	9428 B6	9435 C8	9444 C9	9451 B8	9458 B4	9466 A2		
1405 C8	1412 C4	1419 C8	1430 C8	2455 A6	3407 A8	3432 A9	3453 B4	5402 A7	6406 C5	6413 B7	6420 C8	9401 B3	9408 C3	9415 B5	9422 B5	9429 A8	9436 C4	9445 B4	9452 A9	9459 A1	9467 A3		
1406 C9	1413 C5	1420 B8	1433 A9	2400 A1	2456 A6	3408 A9	3435 C7	3453 B5	5403 B3	6407 A7	6414 A5	6421 B2	9402 B3	9409 C3	9416 B5	9423 B6	9430 B3	9438 B7	9446 A8	9453 A2	9461 A6	9470 C2	

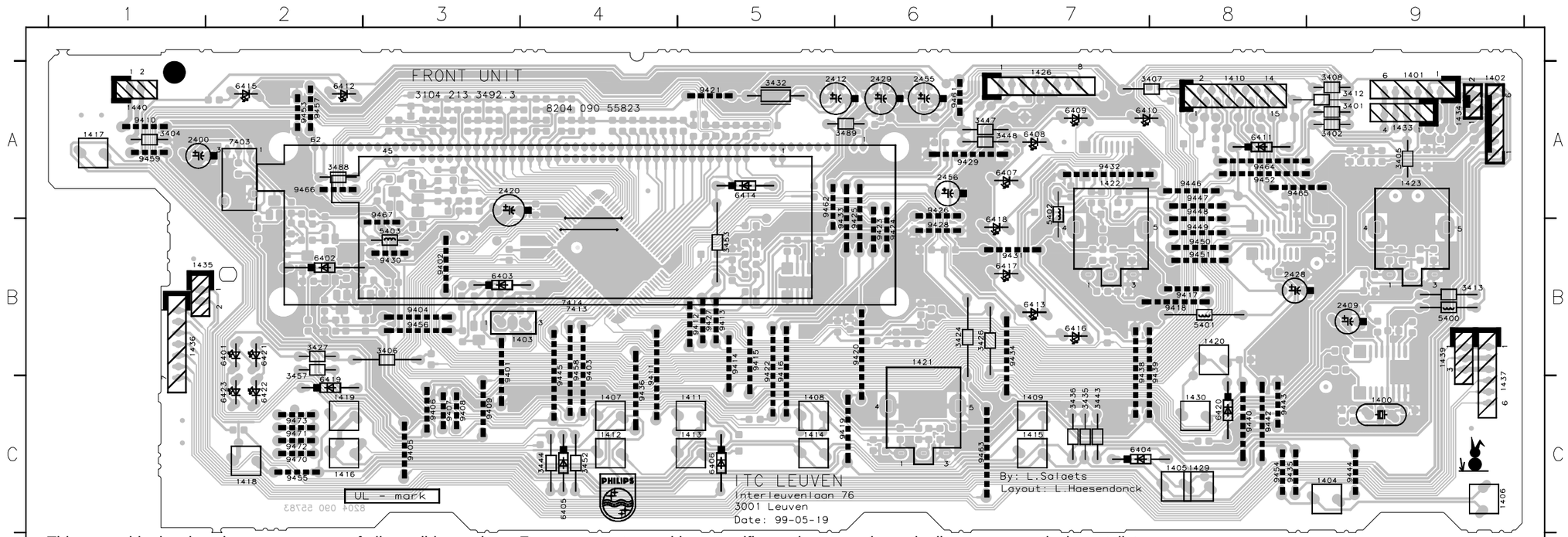

This assembly drawing shows a summary of all possible versions. For components used in a specific version see schematic diagram respectively partslist.

7412 A8	6424 B2	4418 C5	4404 A7	3776 A5	3767 A4	3758 A3	3501 A9	3492 B5	3481 A3	3470 B9	3461 B7	3445 A2	3431 B3	3417 B5	3396 A3	2475 A4	2466 A3	2457 A6	2437 A9	2424 B7	2413 B6	2401 B2
7415 B4	7402 A2	4419 B2	4406 B2	3777 A5	3768 A4	3759 A3	3502 B5	3493 A8	3482 A3	3472 B5	3462 B7	3446 A2	3433 B2	3418 B5	3400 A2	2476 A4	2467 A3	2458 A4	2438 B6	2425 B9	2414 B3	2402 B9
7416 A3	7404 B9	4420 A5	4407 A8	3778 A5	3769 A4	3760 A4	3751 A3	3494 A8	3483 B5	3473 A6	3463 B9	3449 A7	3434 B8	3419 B5	3403 B7	2477 A4	2468 A3	2459 A6	2439 B6	2426 B9	2415 B4	2403 B9
7417 A3	7405 B5	4421 C2	4408 B9	3779 A5	3770 A4	3761 A3	3752 A3	3495 B3	3484 A3	3474 A6	3464 B9	3451 A7	3437 B2	3420 B5	3409 A2	2478 A4	2469 A3	2460 A6	2440 B6	2431 B3	2416 B4	2404 A6
7418 B3	7406 B3	4422 A9	4410 C4	3780 A5	3771 A4	3762 A4	3753 A3	3496 B6	3485 A3	3475 A5	3465 C6	3454 A7	3438 B3	3421 B6	3410 C9	3391 C5	2470 A3	2461 A7	2441 C9	2432 A3	2417 B9	2405 B5
7419 B2	7407 B3	4423 A8	4411 B9	3781 A5	3772 A4	3763 A4	3754 A3	3497 B6	3486 B2	3476 B2	3466 B7	3455 C8	3439 B3	3422 B9	3411 C9	3392 A5	2471 A3	2462 C8	2442 C9	2433 A3	2419 A7	2407 B9
7421 B2	7408 B2	4424 B5	4413 C6	4401 A5	3773 A4	3764 A4	3755 A3	3498 B6	3487 B2	3478 A3	3467 B9	3458 C8	3440 B2	3428 B3	3414 A6	3393 B9	2472 A3	2463 A3	2443 C9	2434 B3	2421 C6	2408 B9
	7409 B3	4425 B7	4416 A5	4402 A7	3774 A5	3765 A4	3756 A3	3499 B6	3490 A3	3479 B3	3468 C6	3459 C6	3441 B3	3429 B3	3415 A2	3394 A8	2473 A4	2464 A3	2444 A8	2435 B3	2422 C6	2410 A9
	7411 A7	4426 A3	4417 B2	4403 A7	3775 A5	3766 A4	3757 A3	3500 A9	3491 B5	3480 A3	3469 B7	3460 C6	3442 B3	3430 B2	3416 B9	3395 A3	2474 A4	2465 A3	2454 B5	2436 A9	2423 B7	2411 B2

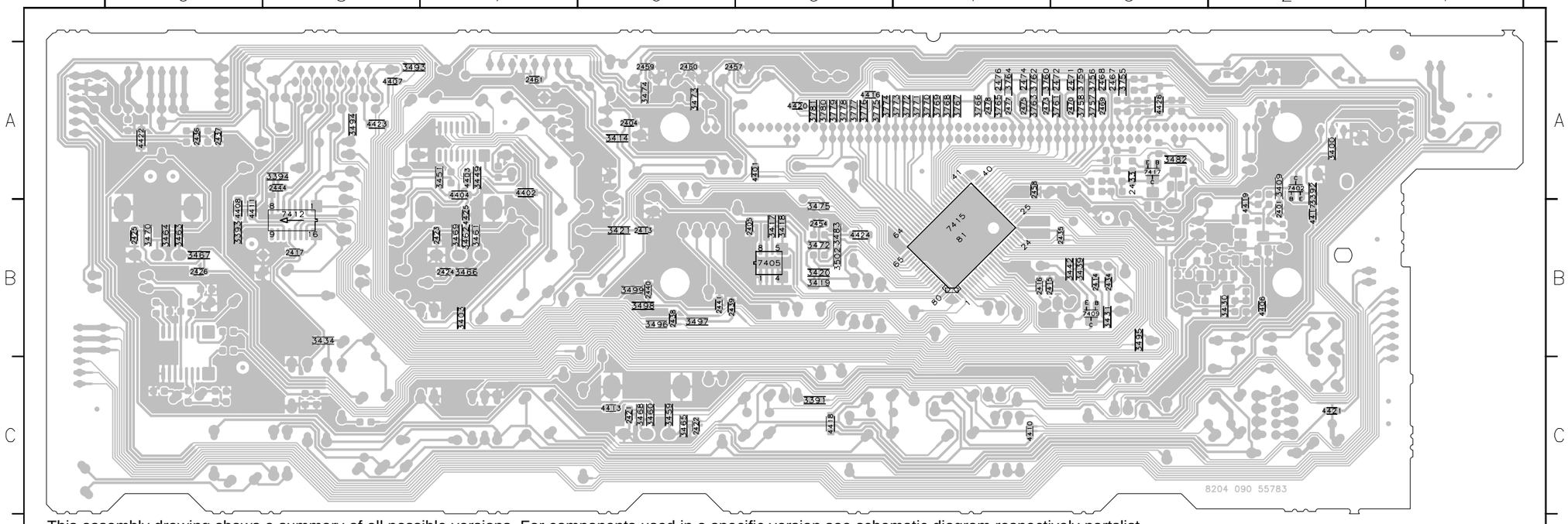

This assembly drawing shows a summary of all possible versions. For components used in a specific version see schematic diagram respectively partslist.

6-8

ELECTRICAL PARTSLIST - FRONT BOARD

POS. NO	MODEL	VERS. COLOR	PART NO.	DESCRIPTION
				MISCELLANEOUS
1400		N	4822 242 11033	CRYSTAL(4,332MH)
1403			4822 242 72066	CST8,00MT
1404			4822 276 13114	SWITCH, PUSH BUTTON
1406				
∫			4822 276 13114	SWITCH, PUSH BUTTON
1409				
1410			4822 265 10981	15FE-BT-VK-N
1411				
∫			4822 276 13114	SWITCH, PUSH BUTTON
1416				
1418			4822 276 13114	SWITCH, PUSH BUTTON
1419			4822 276 13114	SWITCH, PUSH BUTTON
1421			4822 273 10372	SWITCH, ROTARY
1422			4822 273 10372	SWITCH, ROTARY
1423			4822 273 10365	ROTARY ENCODER 24P
1424			4822 265 11584	1P YKB21-5209
1428			4822 265 11336	3P. FEM. CINCH
1429			4822 276 13114	SWITCH, PUSH BUTTON
1430			4822 276 13114	SWITCH, PUSH BUTTON
8002			4822 320 12706	FFC 15P - 220MM
				CAPACITORS
2400			4822 124 41584	100UF 20% 10V
2402		N	5322 122 31647	1NF 10% X7R 63V
2403	3000	N	5322 116 80853	560PF 5% NP0 63V
2404			5322 122 31647	1NF 10% X7R 63V
2405			5322 122 32654	22NF 10% X7R 63V
2407		N	5322 122 34099	470PF 10% X7R 63V
2408		N	5322 122 32654	22NF 10% X7R 63V
2409		N	4822 124 22652	2,2UF 20% 50V
2410		N	5322 122 32654	22NF 10% X7R 63V
2412			4822 124 41751	47UF 20% 50V
2413			5322 122 32654	22NF 10% X7R 63V
2414			5322 122 32654	22NF 10% X7R 63V
2415			5322 122 32658	22PF 5% 50V
2416			5322 122 32658	22PF 5% 50V
2417			5322 122 32654	22NF 10% X7R 63V
2419	4000		5322 122 32654	22NF 10% X7R 63V
2420			4822 124 23432	100UF 20% 10V
2421			5322 122 32654	22NF 10% X7R 63V
2422			5322 122 32654	22NF 10% X7R 63V
2423				
∫			5322 122 32654	22NF 10% X7R 63V
2426				
2427			5322 122 31647	1NF 10% X7R 63V
2428			4822 124 12032	4,7UF 20% 50V
2429			4822 124 41751	47UF 20% 50V
2430			4822 122 33575	220PF 5% NP0 63V CASE 0805
2431	4000		5322 122 32531	100PF 5% NP0 50V
2432	4000		5322 122 32531	100PF 5% NP0 50V
2433			5322 122 32531	100PF 5% NP0 50V
2434			4822 126 14076	220N 25V. P8020
2435				
∫			4822 122 33575	220PF 5% NP0 63V CASE 0805
2441				
2442		N	4822 126 13692	47PF 1% NP0 63V
2443		N	4822 126 13692	47PF 1% NP0 63V
2444			5322 122 32654	22NF 10% X7R 63V
2445			5322 126 10223	4,7NF 10% X7R 63V
2447			5322 126 10223	4,7NF 10% X7R 63V
2448			5322 122 31647	1NF 10% X7R 63V
2449			5322 122 31647	1NF 10% X7R 63V
2454			5322 122 32654	22NF 10% X7R 63V
2455			4822 124 41751	47UF 20% 50V
2456			4822 124 40433	47UF 20% 25V
2457				
∫			5322 122 32654	22NF 10% X7R 63V
2461				
2462			5322 122 31647	1NF 10% X7R 63V
2463				
∫	4000		5322 122 32531	100PF 5% NP0 50V
2466				

POS. NO	MODEL	VERS. COLOR	PART NO.	DESCRIPTION
2467				
∫			5322 122 32531	100PF 5% NP0 50V
2478				
4000		N	5322 116 80853	560PF 5% NP0 63V
				RESISTORS
3391			4822 051 10102	1K00 2% 0,25W
3392				
∫			4822 051 20223	22K00 5% 0,1W
3394				
3395	4000		4822 051 20008	0R00 JUMP. (0805)
3396	3000		4822 051 10102	1K00 2% 0,25W
3400			4822 051 20479	47R00 5% 0,1W
3401			4822 050 21003	10K00 1% 0,6W
3402			4822 050 21003	10K00 1% 0,6W
3403			4822 117 11507	6K8 1% 0,1W
3404			4822 116 52219	330E 5% 0,5W
3405			4822 116 52257	22K 5% 0,5W
3406				
∫			4822 050 21003	10K00 1% 0,6W
3408				
3409			4822 051 10102	1K00 2% 0,25W
3410		N	4822 117 11449	2K2 1% 0,1W
3411		N	4822 117 13579	220K 1% 0.1W RC12H 0805
3412	3000		4822 050 21003	10K00 1% 0,6W
3413		N	4822 050 11002	1K00 1% 0,4W
3414			4822 051 10102	1K00 2% 0,25W
3416		N	4822 117 10833	10K 1% 0,1W
3417				
∫			4822 117 10833	10K 1% 0,1W
3421				
3422		N	4822 117 10833	10K 1% 0,1W
3424			4822 050 11002	1K00 1% 0,4W
3426			4822 050 11002	1K00 1% 0,4W
3427			4822 116 83868	150R 5% 0,5W
3430			4822 051 20223	22K00 5% 0,1W
3431			4822 117 10833	10K 1% 0,1W
3432			4822 052 10478	4R70 5% 0,33W
3434			4822 051 20223	22K00 5% 0,1W
3435			4822 116 52257	22K 5% 0,5W
3436			4822 116 52257	22K 5% 0,5W
3439			4822 117 10833	10K 1% 0,1W
3442			4822 117 10837	100K 1% 0.1W
3443			4822 116 52219	330E 5% 0,5W
3444			4822 116 52219	330E 5% 0,5W
3445	4000		4822 117 13577	330R 1% RC12H 0805 1,25W
3446	4000		4822 117 13577	330R 1% RC12H 0805 1,25W
3447			4822 116 52219	330E 5% 0,5W
3448	4000		4822 116 52219	330E 5% 0,5W
3449			4822 117 10837	100K 1% 0.1W
3451			4822 117 10833	10K 1% 0,1W
3452			4822 116 52219	330E 5% 0,5W
3453			4822 116 52219	330E 5% 0,5W
3454	3000		4822 051 20008	0R00 JUMP. (0805)
3455		U, K	4822 051 20223	22K00 5% 0,1W
3457			4822 116 52219	330E 5% 0,5W
3458			4822 117 13577	330R 1% RC12H 0805 1,25W
3459				
∫			4822 117 10833	10K 1% 0,1W
3464				
3465				
∫			4822 117 11503	220R 1% 0.1W
3470				
3471			4822 051 10102	1K00 2% 0,25W
3472			4822 051 10102	1K00 2% 0,25W
3473			4822 051 20008	0R00 JUMP. (0805)
3474			4822 051 20008	0R00 JUMP. (0805)
3475			4822 117 10837	100K 1% 0.1W
3476			4822 117 10837	100K 1% 0.1W
3477			4822 117 12521	68R 1% 0,1W
3478	4000		4822 117 10837	100K 1% 0.1W
3479	4000		4822 051 10102	1K00 2% 0,25W
3480	4000		4822 117 10837	100K 1% 0.1W
3481	4000		4822 051 10102	1K00 2% 0,25W

POS. NO	MODEL	VERS. COLOR	PART NO.	DESCRIPTION
3482			4822 117 10837	100K 1% 0.1W
3483	3000		4822 117 10837	100K 1% 0.1W
3484	4000		4822 051 10102	1K00 2% 0,25W
3485	4000		4822 051 20008	0R00 JUMP. (0805)
3486			4822 051 20472	4K70 5% 0,1W
3487			4822 117 10833	10K 1% 0,1W
3488	3000		4822 050 24708	4R70 1% 0,6W
3489	3000		4822 050 24708	4R70 1% 0,6W
3490	3000		4822 051 20008	0R00 JUMP. (0805)
3492			4822 117 10837	100K 1% 0.1W
3493				
∫			4822 051 20471	470R00 5% 0,1W
3501				
3502	4000		4822 051 10102	1K00 2% 0,25W
3751	4000			
∫			4822 051 20333	33K00 5% 0,1W
3754	4000			
3755				
∫			4822 051 20333	33K00 5% 0,1W
3781				
4401				
∫			4822 051 20008	0R00 JUMP. (0805)
4404				
4406				
∫			4822 051 20008	0R00 JUMP. (0805)
4408				
4410			4822 051 20008	0R00 JUMP. (0805)
4411			4822 051 20008	0R00 JUMP. (0805)
4413			4822 051 20008	0R00 JUMP. (0805)
4416				
∫			4822 051 20008	0R00 JUMP. (0805)
4426				
4450			4822 051 20008	0R00 JUMP. (0805)
				FILTERS
5400		N	4822 157 11477	LAL02TB2R2J
5401			4822 157 11477	LAL02TB2R2J
5402	4000		4822 157 11477	LAL02TB2R2J
5403			4822 157 11477	LAL02TB2R2J
				DIODES
6400			9322 100 14682	LTL1214A
6403				
∫			4822 130 30621	1N4148
6406				
6407				
∫	4000		4822 130 82978	LTL-16KPE-P
6409				
6410			4822 130 82978	LTL-16KPE-P
6411	3000		4822 130 30621	1N4148
6412	4000		4822 130 82978	LTL-16KPE-P
6413	4000		4822 130 82978	LTL-16KPE-P
6414			4822 130 30621	1N4148
6415				
∫	4000		4822 130 82978	LTL-16KPE-P
6418				
6419			4822 130 30621	1N4148
6420			4822 130 30621	1N4148
6422			4822 130 82978	LTL-16KPE-P
6423			4822 130 82978	LTL-16KPE-P
6424			4822 130 83757	BAS216
				TRNSISTORS & ICs
7402			4822 130 11607	PDTA144ET
7403			4822 130 10165	GP1U28XP
7404		N	4822 209 31981	SAA6579T
7405			4822 209 17445	M24C08-MN6
7409			4822 130 60511	BC847B
7411	4000		5322 209 11306	HEF4094BT
7412			5322 209 11306	HEF4094BT
7413	4000		2722 171 07179	16-BT-68GK
7414	3000		2722 171 07178	12-BT-113GK
7415	3000		4822 209 17446	TMP87CS71F/FR755.1
7415	4000		3103 308 83880	TMP87CS71F/SR4000

POS. NO	MODEL	VERS. COLOR	PART NO.	DESCRIPTION
7416	4000		4822 130 60511	BC847B
7417			4822 130 60511	BC847B
7418	4000		4822 130 60511	BC847B
7419			9340 310 30215	PDTC144ET
7421			4822 130 11607	PDTA144ET

7B-1

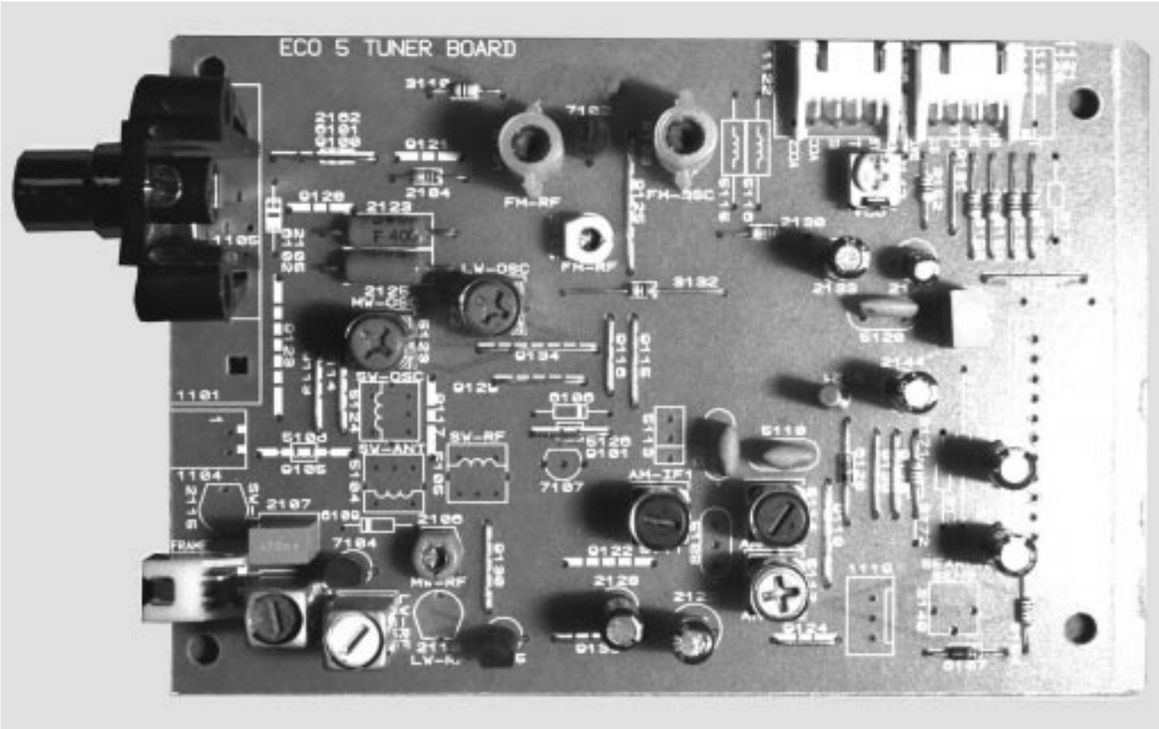

TUNER BOARD ECO5

BLOCK DIAGRAM

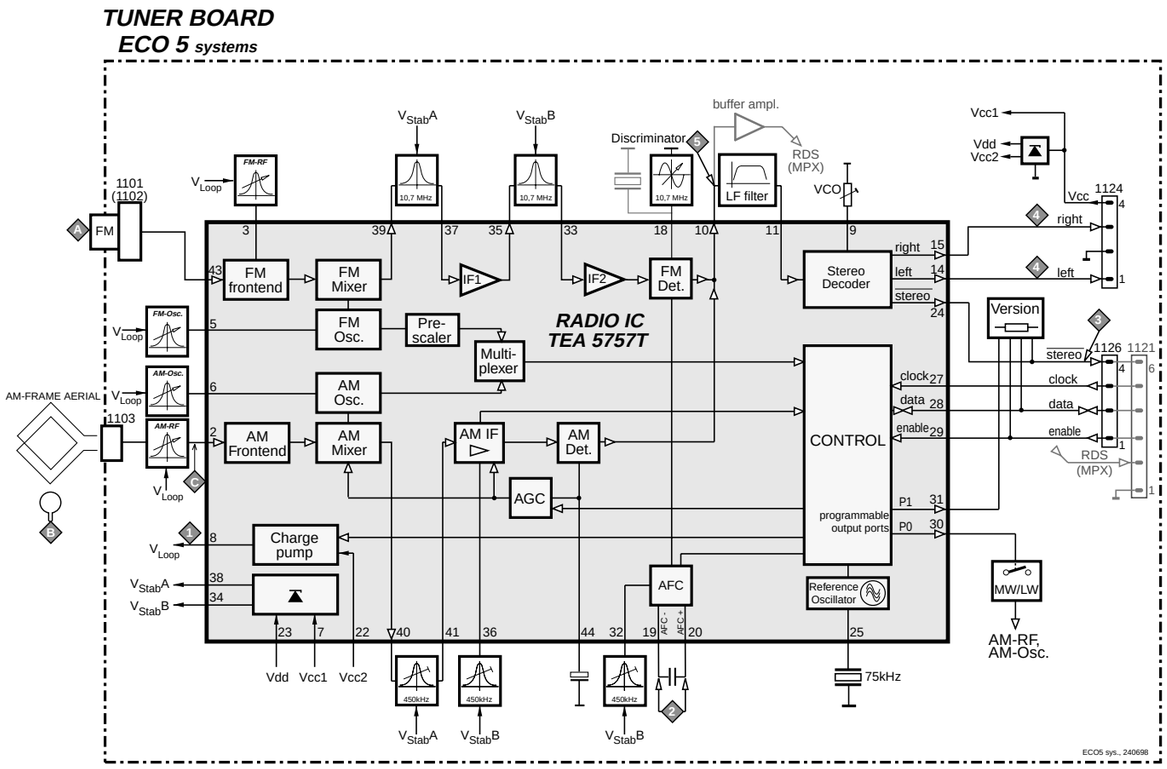

TABLE OF CONTENTS

Blockdiagram 7B-1
Adjustment table 7B-2
Component layout 7B-3
Circuit diagram 7B-4
Parts list 7B-5

TUNER ADJUSTMENT TABLE (**ECO5** FM/MW- and FM/MW/LW - versions with AM-frame aerial)

Waverange	Input frequency	Input	Tuned to	Adjust	Output	Scope/Voltmeter
VARICAP ALIGNMENT						
FM 87.5 - 108MHz (65.81 - 74, 87.5 - 108MHz)			108MHz	5130	1	8V ±0.2V
			87.5MHz (65.81MHz)	check		4.3V ±0.5V (1.2V ±0.5V)
MW FM/AM-version, 10kHz grid 530 - 1700kHz			1700kHz	5123		8V ±0.2V
			530kHz	check		1.1V ±0.4V
FM/MW-version, 9kHz grid 531 - 1602kHz			1602kHz	5123		6.9V ±0.2V
			531kHz	check		1.1V ±0.4V
LW 153 - 279kHz			279kHz	5122		8V ±0.2V
			153kHz	check		1.1V ±0.4V
MW FM/MW/LW- version, 9kHz grid 531 - 1602kHz			1602kHz	5123		8V ±0.2V
			531kHz	check		1.1V ±0.4V
FM IF						
FM	10.7MHz, 50mV continuous wave	F	IC 7101 21, shortcircuit to block AFC, 2141	5119	2	0 ± 3 mV DC
FM RF						
FM 87.5 - 108MHz (65.81 - 74, 87.5 - 108MHz)	108MHz	A mod=1kHz Δf=±22.5kHz	108MHz	2155	4	MAX
	87.5MHz (65.81MHz)		87.5MHz (65.81MHz)	5131		
VCO						
FM	98MHz, 1mV continuous wave	A	98MHz	3142	3	152kHz ±1kHz 1)
AM IF						
MW	450kHz connect pin 6 of IC 7101 (AM Osc.) with short wire to ground (pin 4)	C Δf=±15kHz V_{RF} = 3mV	IC 7101 36, 100nF, 220R	5111	4	max. f_o symmetric
			IC 7101 40, 100nF, 220R, see remark 2)	5112		
AM AFC **MW**		C continuous wave V_{RF} = 10mV		5114	2	0 ± 2 mV DC
AM RF 3)						
MW 4) FM/MW/LW- and FM/MW-version (9kHz grid) 531 - 1602kHz	1494kHz	B Δf = ±30kHz V_{RF} as low as possible	1494kHz	2106	4	max. f_o symmetric
	558kHz		558kHz	5102		
LW	198kHz		198kHz	5103		
MW FM/AM-version, 10kHz grid 530 - 1700kHz	1500kHz		1500kHz	2106		
	560kHz		560kHz	5102		

ECO5, discr. coil, 090797

Use service test program. By selecting the TUNER TEST test frequencies will be stored as preset frequencies automatically.

1) If sensitivity of frequency counter is too low adjust to max. channel separation (input signal: stereo left 90% + 9%, adjust output on right channel to minimum)

2) RC network serves for damping the IF-filter while adjusting the other one.

3) For AM RF adjustments the original frame antenna has to be used !

4) MW has to be aligned before LW.

↕ Repeat

7B-2

TUNER ADJUSTMENT TABLE (**ECO5** FM/MW- stereo versions with AM-frame aerial)

Waverange	Input frequency	Input	Tuned to	Adjust	Output	Scope/Voltmeter
VARICAP ALIGNMENT						
FM 87.5 - 108MHz			108MHz	5130	1	8V ±0.2V
			87.5MHz	check		4.3V ±0.5V
FM Japan 76 - 90MHz plus Ch1 95.75MHz, Ch2 101,75MHz, Ch3 107.75MHz			107,75MHz	5130		8V ±0.2V
			76MHz	check		2.4V ±0.5V
MW FM/AM-version, 10kHz grid 530 - 1700kHz			1700kHz	5123		8V ±0.2V
			530kHz	check		1.1V ±0.4V
MW FM/MW-version, 9kHz grid 531 - 1602kHz			1602kHz	5123		6.9V ±0.2V
			531kHz	check		1.1V ±0.4V
FM IF						
FM	10.7MHz, 50mV continuous wave	F	IC 7101 21, shortcircuit to block AFC, 2141	5119	2	0 ± 3 mV DC
FM RF						
FM 87.5 - 108MHz	108MHz	A mod=1kHz Δf=±22.5kHz	108MHz	2155	5	MAX
	87.5MHz		87.5MHz	5131		
FM Japan 76 - 90MHz plus Ch1 95.75MHz, Ch2 101,75MHz, Ch3 107.75MHz	107.75MHz		107.75MHz	2155		
	76MHz		76MHz	5131		
VCO						
FM	98MHz, 1mV (83MHz for Japan) continuous wave	A	98MHz (83MHz for Japan)	3142	3	152kHz ±1kHz 1)
AM IF						
MW	450kHz connect pin 6 of IC 7101 (AM Osc.) with short wire to ground (pin 4)	C Δf=±15kHz V_{RF} = 3mV	IC 7101 36, 100nF, 220R	5111	5	max. f_o symmetric
			IC 7101 40, 100nF, 220R, see remark 2)	5112		
AM AFC **MW**		C continuous wave V_{RF} = 10mV		5114	2	0 ± 2 mV DC
IF stereo module **MW**		100nF, 50R, E Δf=±15kHz V_{RF} = 1mV		5240	4	max.
AM RF 3)						
MW FM/MW-version, 9kHz grid 531 - 1602kHz	1494kHz	B Δf = ±30kHz V_{RF} as low as possible	1494kHz	2106	4	max. f_o symmetric
	558kHz		558kHz	5102		
MW FM/AM-version, 10kHz grid 530 - 1700kHz	1500kHz		1500kHz	2106		
	560kHz		560kHz	5102		

ECO5 AM stereo, discr.coil 090797

Use service test program. By selecting the TUNER TEST test frequencies will be stored as preset frequencies automatically.

1) If sensitivity of frequency counter is too low adjust to max. channel separation (input signal: stereo left 90% + 9%, adjust output on right channel to minimum)

2) RC network serves for damping the IF-filter while adjusting the other one.

3) For AM RF adjustments the original frame antenna has to be used !

↕ Repeat

7B-3

1101 A1	2106 C2	2137 C5	3149 C5	3173 A5	5114 C4	5130 A3	7104 C2	9117 B2	9129 B3
1102 A1	2107 C2	2138 A5	3152 A5	5102 C2	5115 A4	5131 A3	7105 C3	9118 B4	9130 C3
1103 C1	2110 C2	2144 B5	3154 C5	5103 C2	5116 A4	6101 A2	7107 B3	9119 C4	9131 A5
1104 B1	2115 C1	2148 B4	3157 B5	5104 C2	5119 B5	6102 A1	7119 C4	9120 B4	9133 C3
1105 A1	2123 A2	2155 A3	3158 A5	5105 B2	5120 B4	6103 A1	9100 A2	9121 A2	9134 B3
1119 C5	2125 A2	2162 A2	3159 A5	5106 B2	5121 B4	6104 A2	9101 B3	9122 C3	9136 A5
1120 A5	2128 C3	3105 B3	3160 A5	5109 B4	5122 B3	6106 B3	9105 B2	9123 B1	9137 A5
1130 B5	2129 C4	3110 A2	3161 A5	5110 B4	5123 B2	6107 C5	9111 C2	9124 C4	
1131 B5	2130 A4	3132 B3	3170 C5	5111 C3	5124 B2	6109 C2	9113 B2	9125 A3	
2104 A2	2133 A4	3142 A4	3171 C5	5112 C4	5126 B3	6120 C4	9114 B2	9126 B5	
2105 A1	2135 B5	3147 B5	3172 C5	5113 B3	5127 B4	7102 A3	9115 B3	9128 A2	

2101 C4	2118 B4	2139 B2	2153 C3	2166 B2	3112 A3	3123 A3	3143 C2	3175 A2	4105 B3	4153 B4	6105 A4	7120 B4
2102 C4	2119 B4	2141 B1	2154 C3	2167 B2	3113 A2	3125 A3	3144 C2	3176 C2	4106 B4	4154 C3	6110 A4	7121 B3
2103 C3	2120 B4	2142 B1	2156 C4	2168 B1	3114 A3	3126 B3	3145 C2	3177 A1	4107 C4	4155 A4	6111 B4	7122 B4
2108 A4	2122 B3	2143 A1	2157 B4	3101 C3	3115 A3	3127 B3	3146 A1	3178 A1	4108 B4	4156 A2	6130 C2	7123 B4
2109 A4	2124 A5	2145 C1	2158 B4	3102 C3	3116 A3	3128 B3	3148 A1	3179 A1	4109 A3	4157 B3	6131 C3	7124 C4
2111 A2	2126 C2	2146 C1	2159 C2	3103 C3	3117 B4	3133 B4	3153 C2	3180 A4	4110 A3	4158 C2	7101 B2	7125 A1
2112 B5	2127 C2	2147 C1	2160 C4	3104 B3	3118 B3	3134 B4	3155 A2	3181 C3	4111 C1	4159 A2	7103 C2	
2113 A4	2131 C2	2149 B2	2161 A3	3106 C4	3119 A3	3136 B4	3156 A1	4101 A4	4120 C2	4160 A1	7106 A3	
2114 A4	2132 C1	2150 B2	2163 A2	3108 A4	3120 B4	3137 B4	3167 C2	4102 A4	4150 B2	4161 A1	7108 A3	
2116 B3	2134 C1	2151 C2	2164 B1	3109 A4	3121 A3	3140 B2	3168 B3	4103 C2	4151 B3	4162 C1	7109 A3	
2117 A3	2136 B1	2152 C3	2165 B3	3111 A3	3122 B3	3141 C2	3169 B2	4104 A2	4152 B3	4163 C1	7111 A1	

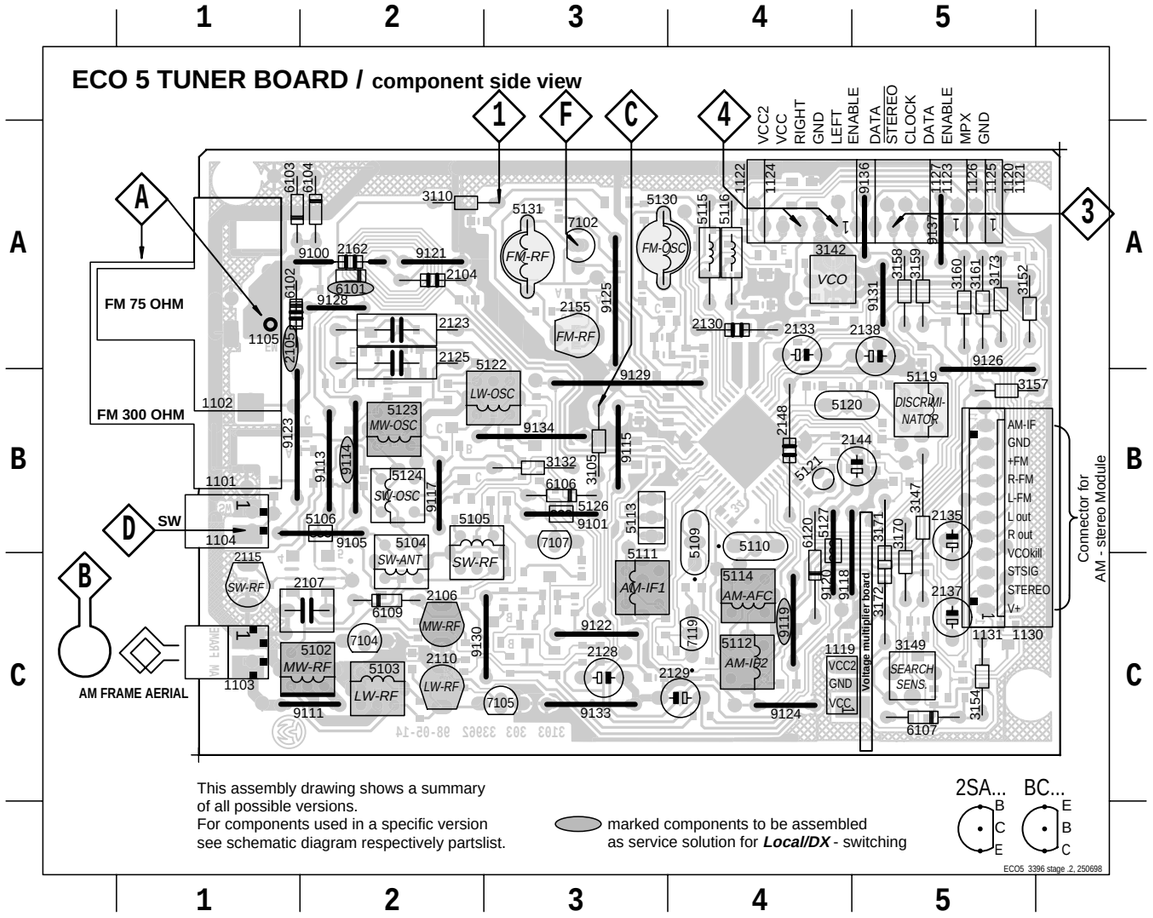

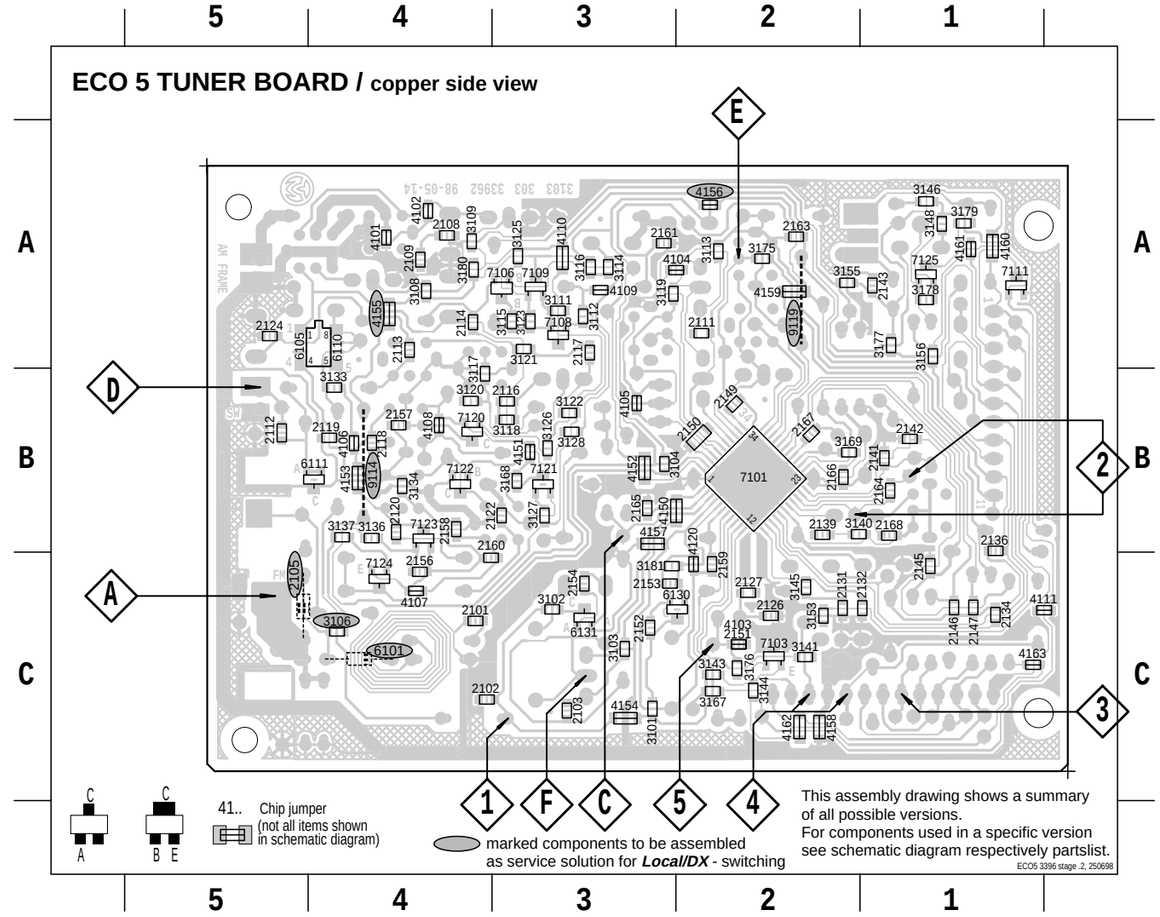

7B-4

TUNER BOARD ECO5 / Systems

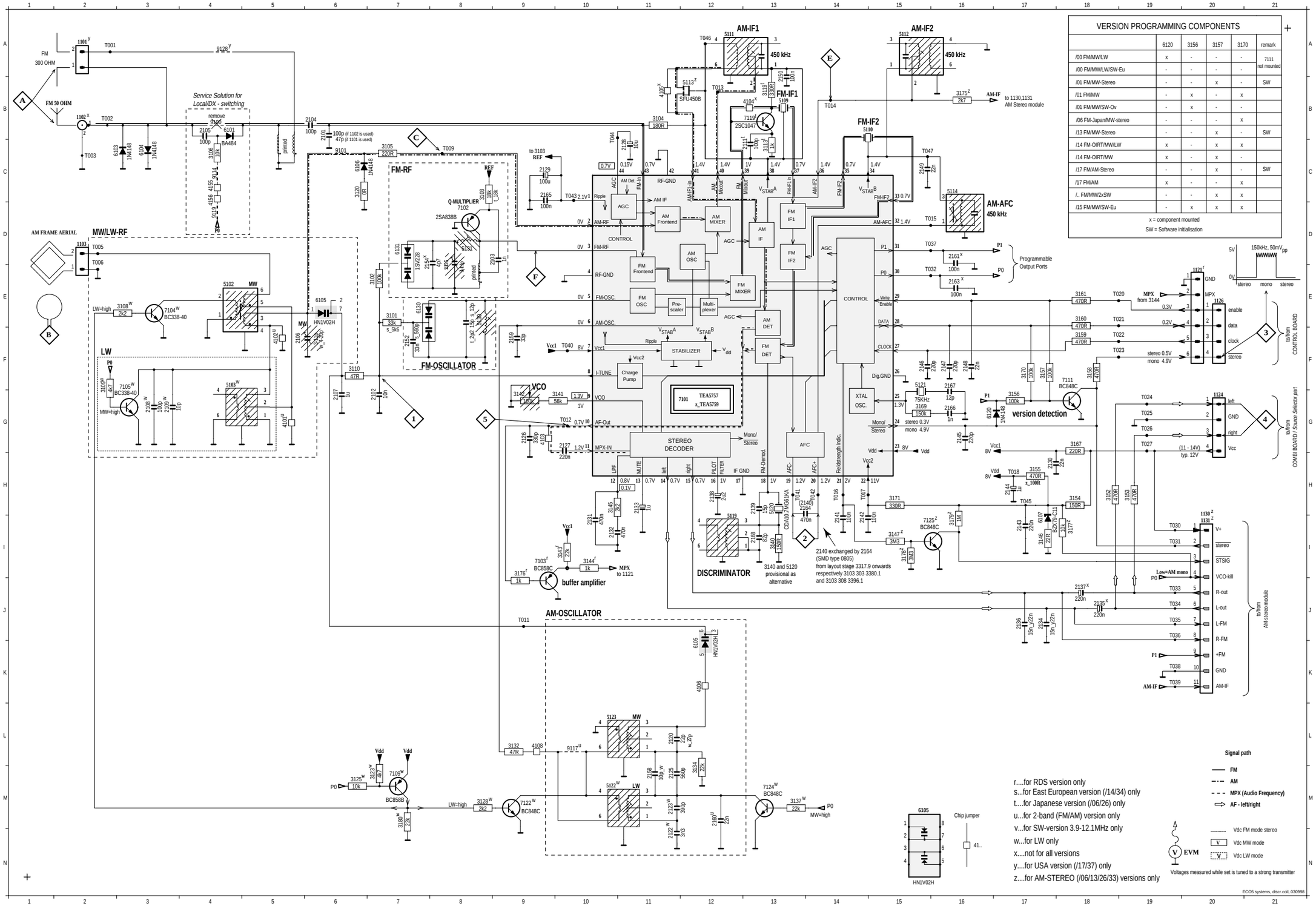

VERSION PROGRAMMING COMPONENTS					
	6120	3156	3157	3170	remark
/00 FM/MW/LW	x	-	-	-	7111 not mounted
/00 FM/MW/LW/SW-Eu	-	-	-	-	
/01 FM/MW-Stereo	-	-	x	-	SW
/01 FM/MW	-	x	-	x	
/01 FM/MW/SW-Ov	-	x	-	-	
/06 FM-Japan/MW-stereo	-	-	-	x	
/13 FM/MW-Stereo	-	-	x	-	SW
/14 FM-OIRT/MW/LW	x	-	x	x	
/14 FM-OIRT/MW	x	-	x	-	
/17 FM/AM-Stereo	-	-	x	-	SW
/17 FM/AM	x	-	-	x	
/.. FM/MW/2xSW	-	-	x	x	
/15 FM/MW/SW-Eu	-	x	x	x	

x = component mounted
SW = Software initialisation

1101 A 1
1102 B 2
1103 D 2
1121 E20
1124 G20
1126 E20
1130 I20
1131 I20
2101 C 6
2102 G 7
2103 D 9
2104 B 6
2106 F 5
2107 G 6
2108 G 3
2109 G 3
2111 C13
2120 L11
2122 N11
2123 M11
2125 M11
2126 G 9
2127 G10
2128 C11
2129 C 9
2130 H17
2131 I10
2132 I10
2133 H11
2134 J17
2135 J18
2136 J17
2137 J18
2138 H12
2139 H13
2140 H14
2141 H14
2142 H14
2143 I17
2144 H17
2145 G16
2146 F15
2147 F16
2148 F16
2149 C15
2150 B13
2152 F 7
2153 E 8
2154 E 7
2155 D 8
2158 M11
2159 F 9
2160 M12
2161 D16
2163 E16
2164 H14
2165 C 9
2166 G16
2167 F16
2168 I 13
3101 E 7
3102 E 7
3103 C 8
3104 B11
3105 C 7
3108 E 3
3109 F 2
3110 F 6
3113 C13
3119 B13
3120 C 6
3123 M 7
3125 M 6
3128 M 8
3132 L 9
3134 M12
3137 M13
3140 I13
3141 G10
3142 G 9
3143 I10
3144 I10
3145 H10
3146 I17
3147 I15
3152 H18
3153 H19
3154 H18
3155 H17
3156 G17
3157 F17
3158 F18
3159 F18
3160 E18
3161 E18
3167 G18
3169 G15
3170 F17
3171 H15
3175 B16
3176 J 9
3177 I18
3178 I15
3179 I16
3180 M7
4101 G 5
4102 F 5
4103 G 9
4104 B13
4105 B11
4106 K12
4108 L 9
5102 E 4
5103 F 4
5109 B13
5110 B14
5111 A13
5112 A15
5113 B12
5114 C16
5119 I 12
5120 H13
5121 F15
5122 M11
5123 L11
5130 E 8
5131 D 8
6103 C 2
6104 C 3
6105 K12
6105 E 6
6106 C 6
6107 H17
6120 G16
6130 E 7
6131 D 7
7101 G11
7102 D 8
7103 I 9
7104 E 3
7105 F 2
7109 M 7
7111 F18
7119 B13
7122 M 9
7124 M13
7125 I16
9100 B 4
9101 C 6
9117 L10
9128 A 4

ELECTRICAL PARTSLIST *TUNER ECO5*

MISCELLANEOUS

1101	4822 267 31505	SOCKET 2-POLE CLICKFIT, 300Ω				only for /17
1102	4822 267 10283	SOCKET COAX, IEC 75Ω				not for /17

CAPACITORS

2101©	5322 122 32531	100pF	5%	50V		not for /17
2101©	5322 122 32452	47pF	5%	63V		only for /17
2102©	4822 122 33177	10nF	20%	50V		
2103©	5322 122 34123	1nF	10%	50V		
2104	4822 122 33195	100pF	10%	50V		
2106	4822 125 60101	3-11pF	TRIMCAP.			
2107	4822 121 51319	1µF	20%	50V		
2120©	5322 122 32658	22pF	5%	50V		
2125	4822 121 51381	560pF	1%	400V		
2126©	5322 122 31863	330pF	5%	50V		
2127©	4822 126 13473	220nF	20%	50V		
2128	4822 124 41579	10µF	20%	50V		
2129	4822 124 41584	100µF	20%	10V		
2130	4822 126 11585	22nF	20%	50V		
2131©	4822 126 13482	470nF	20%	16V		
2132©	4822 126 13482	470nF	20%	16V		
2133	4822 124 40242	1µF	20%	63V		
2134©	4822 126 13188	15nF	5%	63V		not for /17
2134©	5322 122 32654	22nF	10%	63V		only for /17
2135	4822 124 40746	0,22µF	20%	63V		
2136©	4822 126 13188	15nF	5%	63V		not for /17
2136©	5322 122 32654	22nF	10%	63V		only for /17
2137	4822 124 40746	0,22µF	20%	63V		
2138	4822 124 41576	2,2µF	20%	50V		
2139©	4822 126 14236	15pF	5%	50V		
2141©	4822 126 10002	100nF	20%	50V		
2142©	4822 126 10002	100nF	20%	50V		
2143©	4822 126 13473	220nF	20%	50V		
2144	4822 124 40242	1µF	20%	63V		
2145©	4822 122 33575	220pF	5%	50V		
2146©	4822 122 33575	220pF	5%	50V		
2147©	4822 122 33575	220pF	5%	50V		
2148	4822 126 11585	22nF	20%	50V		
2149©	5322 122 32654	22nF	10%	63V		
2150©	4822 122 31947	100nF	20%	50V		
2152©	4822 126 12105	33nF	5%	63V		not for /14
2152©	5322 116 80853	560pF	5%	63V		only for /14
2153©	4822 122 32139	12pF	5%	63V		only for /14
2153©	4822 122 32504	15pF	5%	50V		not for /14
2155	4822 125 60101	3-11pF	TRIMCAP.			
2159©	5322 122 32659	33pF	5%	50V		
2160©	5322 122 32654	22nF	10%	63V		
2164©	4822 126 13482	470nF	20%	16V		
2165©	4822 126 10002	100nF	20%	50V		
2166©	5322 122 34123	1nF	10%	50V		
2167©	4822 122 32139	12pF	5%	63V		
2168©	4822 126 13695	82pF	1%	63V		

RESISTORS

3101©	4822 051 20333	33kΩ	5%	0,1W		not for /14
3101©	4822 051 20562	5,6kΩ	5%	0,1W		only for /14
3102©	4822 051 20104	100kΩ	5%	0,1W		
3103©	4822 117 10965	18kΩ	2%	0,1W		
3104©	4822 117 11448	180Ω	10%	0,1W		
3105	4822 116 83872	220Ω	5%	0,5W		
3110	4822 116 52195	47Ω	5%	0,5W		
3120©	4822 051 20008	CHIP JUMPER 0805				
3132	4822 116 52195	47Ω	5%	0,5W		
3134©	4822 051 20224	220kΩ	5%	0,1W		
3141©	4822 117 11148	56kΩ	1%	0,1W		

RESISTORS

3142	4822 100 11163	100kΩ	TRIMPOT LIN.			
3145©	4822 117 11449	2,2kΩ	1%	0,1W		
3146©	4822 051 20229	22Ω	5%	0,1W		
3152	4822 116 83883	470Ω	5%	0,16W		
3153©	4822 051 20471	470Ω	5%	0,1W		
3154	4822 116 83868	150Ω	5%	0,5W		
3155©	4822 051 20471	470Ω	5%	0,1W		
3156©	4822 051 20104	100kΩ	5%	0,1W		not for /14/17
3157	4822 116 52234	100kΩ	5%	0,5W		only for /14
3158	4822 116 83883	470Ω	5%	0,16W		
3159	4822 116 83883	470Ω	5%	0,16W		
3160	4822 116 83883	470Ω	5%	0,16W		
3161	4822 116 83883	470Ω	5%	0,16W		
3167©	4822 117 11503	220Ω	5%	0,1W		
3169©	4822 051 20154	150kΩ	5%	0,1W		
3170	4822 116 52234	100kΩ	5%	0,5W		not for /14
3171	4822 116 52219	330Ω	5%	0,5W		
4101©	4822 051 20008	CHIP JUMPER 0805				
4102©	4822 051 20008	CHIP JUMPER 0805				
4103©	4822 051 20008	CHIP JUMPER 0805				
4104©	4822 051 20008	CHIP JUMPER 0805				
4105©	4822 051 20008	CHIP JUMPER 0805				
4106©	4822 051 20008	CHIP JUMPER 0805				
4108©	4822 051 20008	CHIP JUMPER 0805				
4111©	4822 051 20008	CHIP JUMPER 0805				
4120©	4822 051 20008	CHIP JUMPER 0805				
4150©	4822 051 10008	CHIP JUMPER 1206				
4152©	4822 051 10008	CHIP JUMPER 1206				
4153©	4822 051 10008	CHIP JUMPER 1206				
4154©	4822 051 10008	CHIP JUMPER 1206				
4157©	4822 051 10008	CHIP JUMPER 1206				
4158©	4822 051 10008	CHIP JUMPER 1206				
4159©	4822 051 10008	CHIP JUMPER 1206				

COILS

5102	4822 157 71634	RF-COIL MW
5109	4822 242 70665	FM-IF FILTER 10,7MHZ
5110	4822 242 70665	FM-IF FILTER 10,7MHZ
5111	4822 158 60511	AM-IF FILTER 450kHz
5112	4822 157 70302	AM-IF FILTER 450kHz
5114	4822 157 70302	AM-IF FILTER 450kHz
5119	4822 157 11443	DISCRIMINATOR COIL
5121	4822 242 10261	QUARTZ 75kHz
5123	4822 157 60517	RF-COIL AM
5130	4822 156 30947	RF COIL 1,5 TURNS
5131	4822 156 30947	RF COIL 1,5 TURNS

DIODES

6103	4822 130 30621	1N4148	
6104	4822 130 30621	1N4148	
6105©	4822 130 83075	HN1V02H	
6106	4822 130 30621	1N4148	
6107	4822 130 34488	BZX79-C11	
6120	4822 130 30621	1N4148	only for /14/17
6130©	4822 130 82833	1SV228	
6131©	4822 130 82833	1SV228	

TRANSISTORS

7102	4822 130 60093	2SA838B
7111©	5322 130 42136	BC848C

INTEGRATED CIRCUITS

7101©	4822 209 90924	TEA5757H/V1, RADIO IC

ELECTRICAL PARTS LIST *TUNER ECO5 for 06 (Japanese version)*

1102	4822 265 20598	SOCKET COAX YKD31-0468 75Ω
1130	4822 267 10749	CONNECTOR S11B-XH-A (11P)
2111	5322 122 32531	100pF 5%NP0 50V
2153	5322 122 33063	2.2pF 5% NP0 50V
3113	4822 051 10102	1kΩ 2% 0,25W
3119	4822 051 20331	330Ω 5% 0,1W
3134	4822 051 20223	22kΩ 5% 0,1W
3147	4822 111 50499	3.3MΩ 5% 0,2W
3155	4822 051 20101	100Ω 5% 0,1W
3175	4822 117 12955	2.7kΩ 1% 0,1W 0805
3177	4822 117 10833	10kΩ 1% 0,1W
3178	4822 051 20335	3.3MΩ 5% 0,1W
3179	4822 051 20105	1MΩ 5% 0,1W
4161	4822 051 20008	CHIP JUMPER. 0805
5113	4822 242 80989	FILTER SER. SFU450B 457kHz
5130	4822 157 70033	COIL-FM OSC
7101		TEA5759H/V1 RADIO IC
7119	4822 130 60163	2SC1047C
7125	5322 130 42755	BC847C BC848C

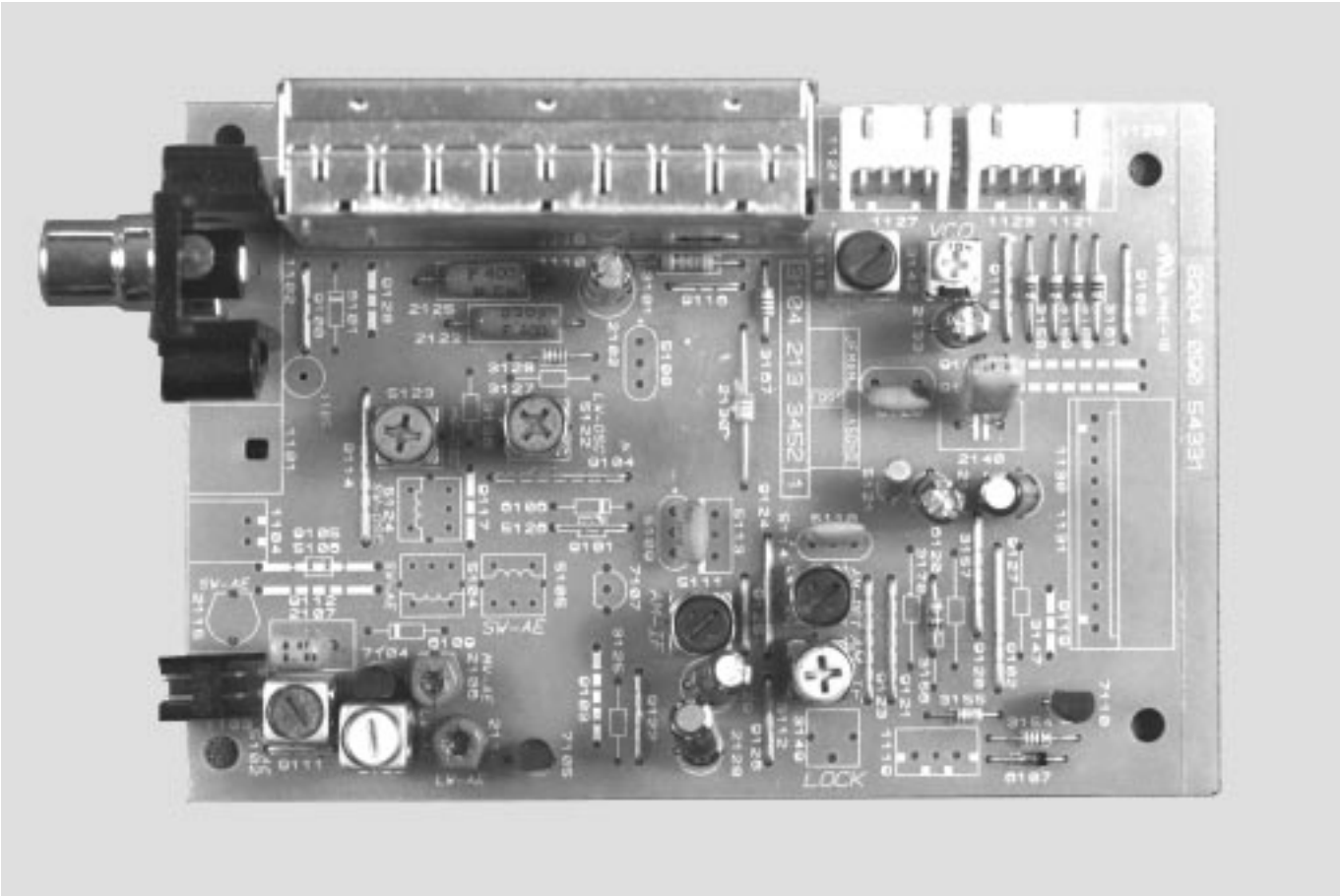

TUNER 95 BOARD

TABLE OF CONTENTS

Adjustment table 7D-2
Blockdiagram 7D-3
Component layout 7D-4
Circuit diagram 7D-5
Parts list 7D-6

TUNER 95 bis Adjustment Table (FM, MW, LW with Frame antenna)

Waverange	Input frequency	Input	Set tuned to	Adjust	Output	Scope / Voltmeter
VARICAP ALIGNMENT						
FM (50)			108 MHz	check		7 ... 9V
87.5 - 108 MHz			87.5 MHz	check		1.3 ... 2V
MW (9)			1602 kHz	5123		8.3V ± 0.2V
531 - 1602 kHz			531 kHz	check	6	1V ± 0.4V
LW (3)			279 kHz	5122		8.3V ± 0.2V
153 - 279 kHz			153 kHz	check		1V ± 0.4V
FM – DETECTION						
FM	98 MHz 1mV continuous wave ***short pin 21 (IC7101) to ground***	A	98 MHz	5107	1 2	0mV ± 3mV
FM – VCO						
FM	98 MHz 1 mV continuous wave	A	98 MHz	3142	3	152kHz ± 1 kHz
DISTORTION						
FM	98 MHz 1 mV 90 % L + 9 % pilot mod = 1kHz	A	98MHz	mixcoil inside Tuner 1110	4	Distortion minimum
AM – IF						
MW	450kHz Δf = 10kHz Low as possible Swept signal	100nF 50E	MW	5111	7	symmetrical and max. height ↕
				5112		
	450kHz continuous wave	C		5114	1 2	0mV ± 2mV
AM - RF						
MW	558kHz Mod = 1kHz 30 % AM 1494 kHz	B	558kHz	5102		MAX ↕
			1494kHz 7	2106		
LW	198kHz mod = 1kHz 30 % AM	*	198kHz	5103		MAX

adjtable for 3104 217 04121/04341

* Signal send via a frame antenna
(..) = tuning grid in kHz

↕ repeat

7D-3

BLOCKDIAGRAM

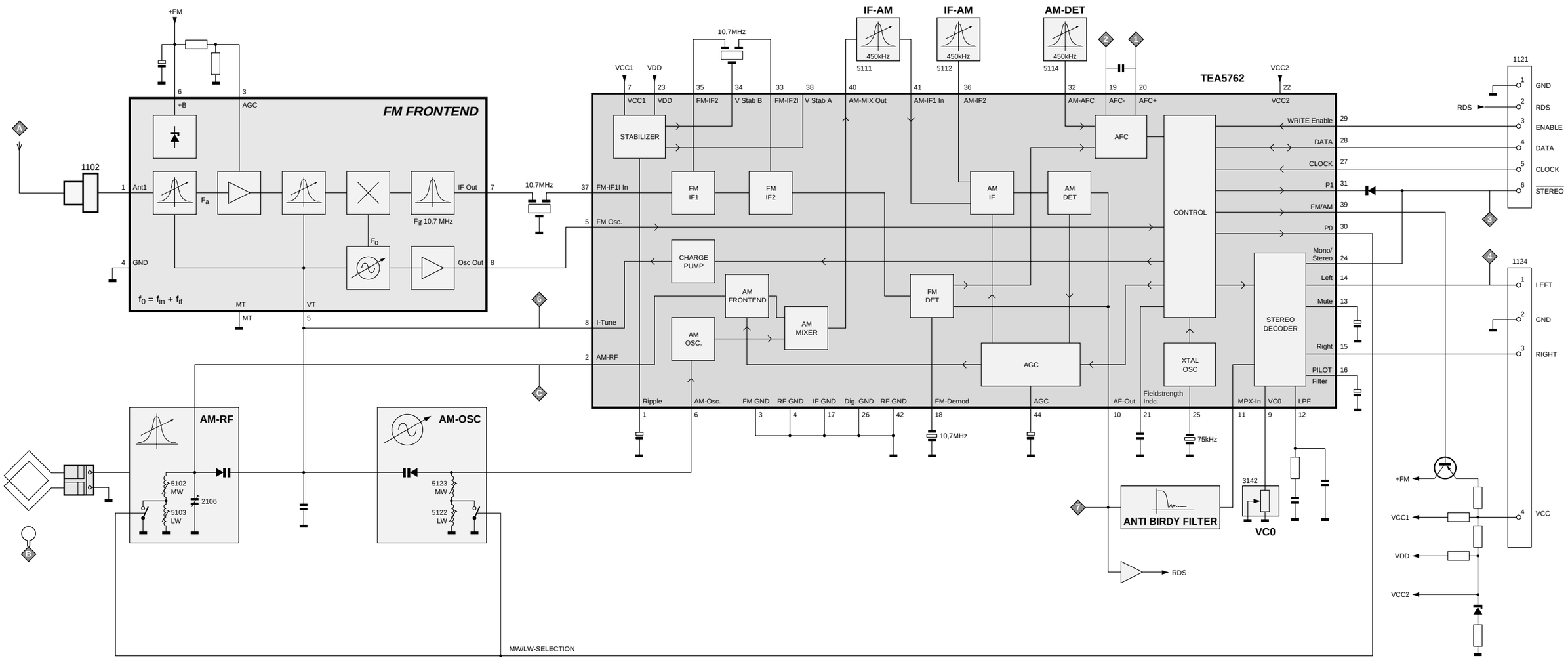

7D-4

1102	F4	2107	C4	2128	C7	2136	G10	2144	E10	2160	E9	3120	D6	3132	E5	3143	G8	3153	G9	3163	F8	3176	D9	3188	G11	5111	C8	6106	E7	7110	D11	9108	G11	9121	D9
1103	C4	2108	C6	2129	C8	2137	E11	2145	G11	2161	E9	3123	E4	3134	E5	3144	H9	3154	C10	3164	C11	3177	F7	3192	D8	5112	C9	6107	B10	7122	F7	9111	C4	9123	D9
1110	G7	2109	C5	2130	F8	2138	E10	2147	G11	2162	C11	3124	E5	3137	G5	3145	F9	3155	C10	3165	D8	3178	B8	3197	C7	5114	D8	6120	D10	7124	G6	9114	E5	9125	D8
1121	H11	2120	F5	2131	F9	2139	E8	2148	E9	3103	H6	3125	C7	3138	D9	3146	B10	3158	G11	3167	F8	3181	D8	5102	C4	5115	G9	7101	E9	9100	F4	9115	C8	9126	C8
1124	H9	2122	E6	2132	F9	2140	F10	2150	F8	3104	G6	3128	F6	3139	F8	3147	H9	3159	G11	3169	D5	3183	E7	5103	C5	5121	E9	7103	G9	9101	E7	9116	G8		
1126	G10	2123	F6	2133	F10	2141	E10	2151	F9	3107	G7	3129	E6	3140	H8	3150	C11	3160	G11	3171	D11	3184	E7	5107	F10	5122	E7	7104	D5	9102	D10	9118	G10		
2102	G7	2125	G6	2134	G10	2142	E9	2152	F9	3108	C6	3130	E6	3141	G9	3151	C10	3161	G11	3172	F7	3185	E7	5109	D7	5123	E5	7105	B6	9104	E6	9119	G7		
2106	C5	2127	F9	2135	G11	2143	C10	2158	D10	3109	B7	3131	C6	3142	G10	3152	G9	3162	D9	3173	F7	3186	G8	5110	E9	6105	D4	7109	C6	9107	F11	9120	D10		

TUNER 95 bis Combi: Copper side view

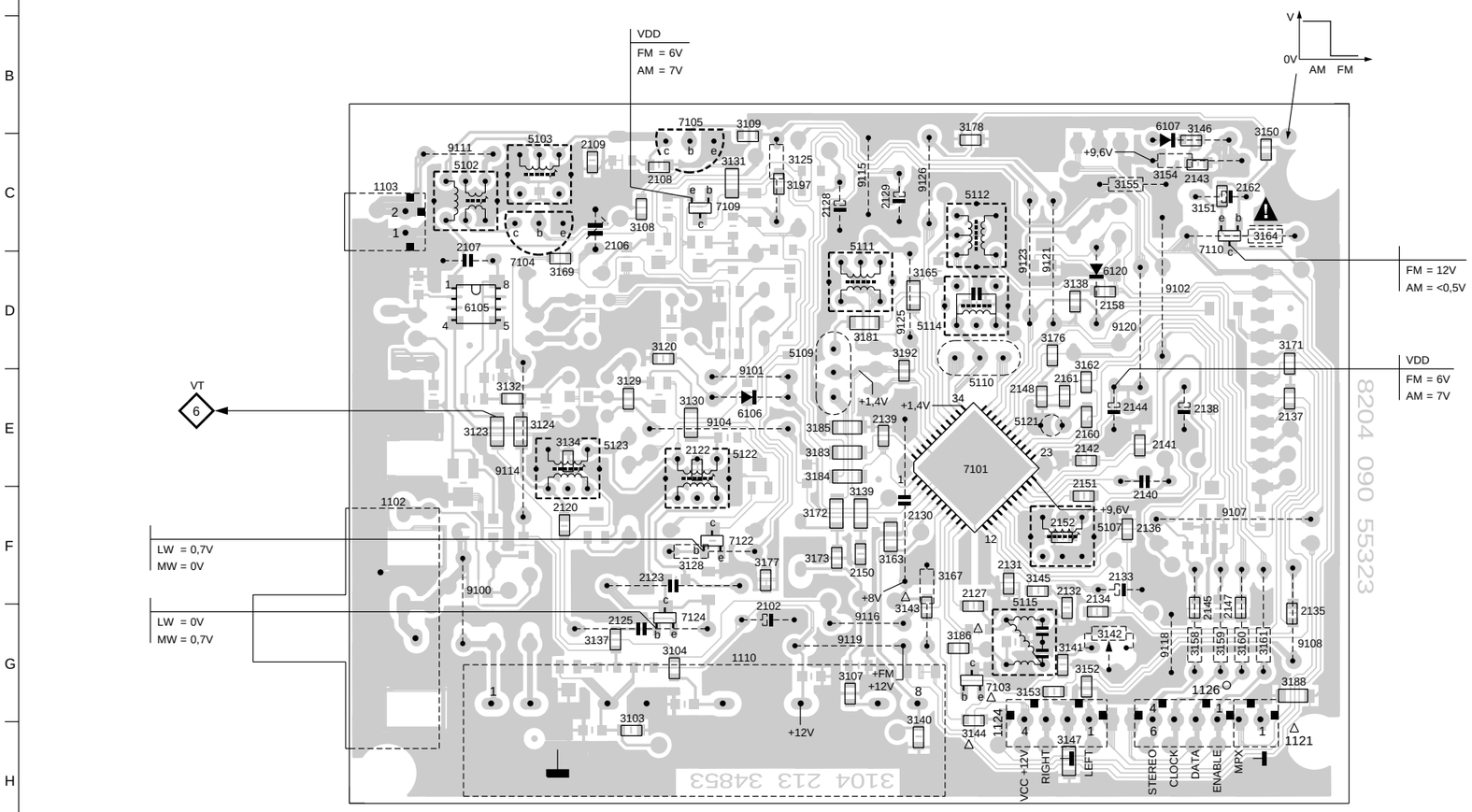

IC 6105

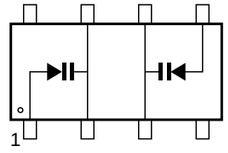

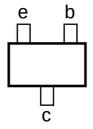

△ only in RDS version (04121)

○ not in RDS version (04341)

TUNER 95 bis
3104 217 04121/04341 bl. 110 - 01

LEU0149
9813

1102	D1	1124	F21	2107	J6	2122	M7	2128	I13	2132	I17	2136	H19	2140	C14	2144	K20	2150	C6	2160	I15	3104	G4	3120	H5	3128	L9	3132	J7	3141	I16	3145	I17	3151	I20	3155	J20	3161	D19	3167	I20	3177	M10	3184	I8	3192	C12	5107	J12	5112	C12	5122	L7	6106	H5	7103	K17	7110	I19
1103	G2	1126	E20	2108	L2	2123	L7	2129	I8	2133	G18	2137	G19	2141	H15	2145	E19	2151	H12	2161	I15	3107	C6	3123	I6	3129	K8	3134	L6	3142	I16	3146	L20	3152	F20	3158	E19	3162	I15	3169	L5	3178	N20	3185	I13	3197	L11	5109	B6	5114	C13	5123	K7	6107	K20	7104	J2	7122	L9
1110	D4	2102	C2	2109	L3	2125	L7	2130	J20	2134	G19	2138	H18	2142	K19	2147	E19	2152	I11	2162	H20	3108	J1	3124	K7	3130	K8	3137	L5	3143	K17	3147	N20	3153	G20	3159	E19	3163	J8	3172	B6	3181	C7	3186	K16	5102	I3	5110	C9	5115	J15	6105a	I5	6120	E17	7105	K2	7124	L6
1121	C21	2106	J4	2120	K7	2127	H16	2131	I17	2135	F19	2139	I7	2143	K20	2148	E19	2158	L18	3103	G3	3109	K1	3125	L11	3131	M10	3140	F7	3144	K17	3150	H19	3154	J20	3160	D19	3164	I20	3173	B6	3183	I13	3188	M20	5103	L4	5111	C11	5121	I15	6105b	I6	7101	C15	7109	L10		

TUNER 95 bis

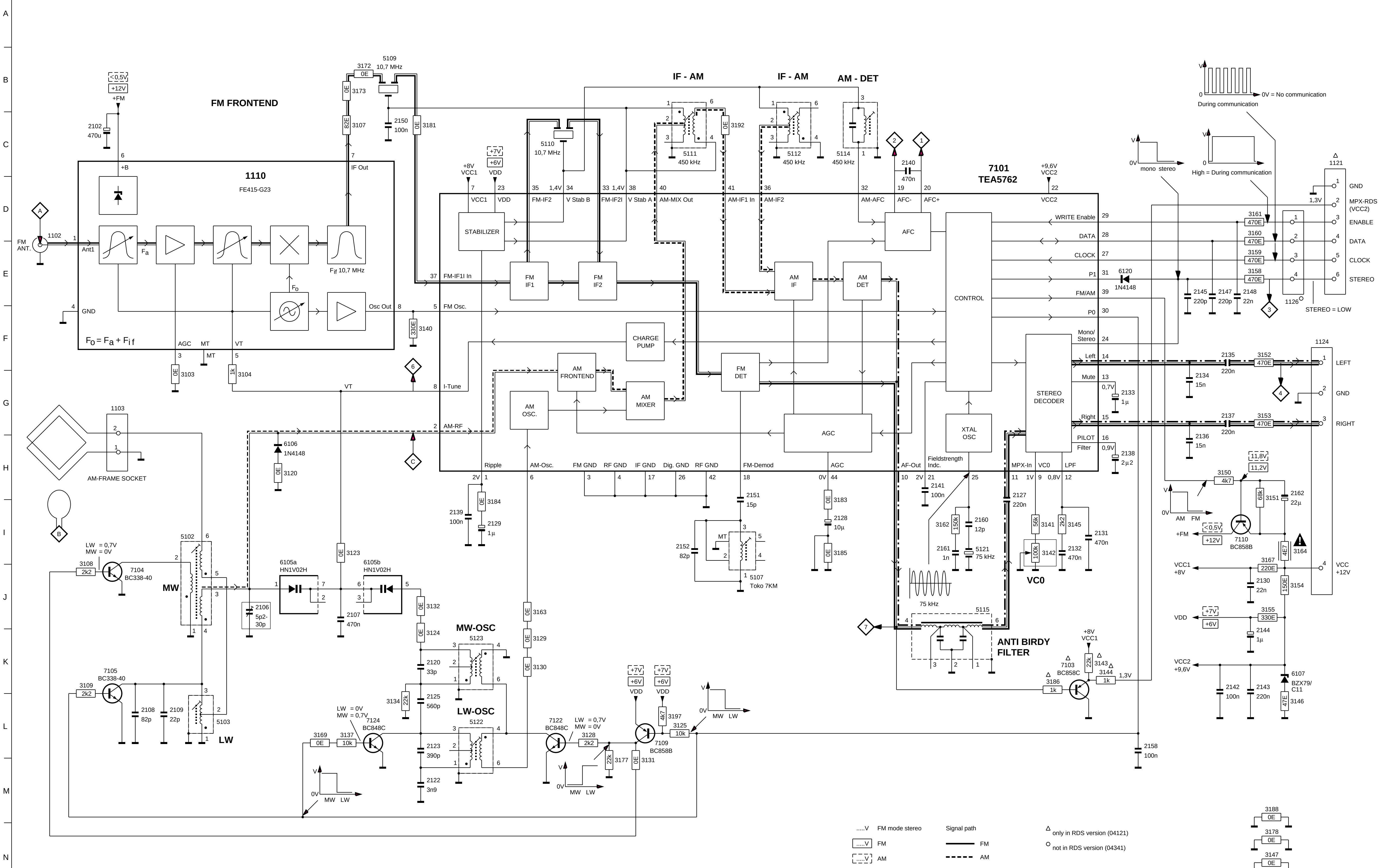

3104 217 04120 bl. 130 - 01
3104 217 04121/04341 bl. 130 - 01

LEU0150
ITCL/9851-9813

ELECTRICAL PARTS LIST - TUNER 95 BOARD

MISCELLANEOUS

1102	4822 267 10283	Socket Coaxial IEC 75R
1103	4822 265 31184	JST Connector 2 pin
1110	4822 210 10739	Frontend Assembly FE415-G23

CAPACITORS

2102	4822 124 40433	47µF 20% 25V
2106	4822 125 60102	Trimmer 5,2-30pF 100V
2107	4822 121 51252	470nF 5% 63V
2108	4822 126 13695	82pF 1% 63V
2109	4822 126 13691	27pF 1% 63V
2120	5322 122 32659	33pF 5% 50V
2122	5322 126 10465	3,9nF 10% 63V
2125	4822 121 10578	560P 1% 630V
2127	4822 122 32927	220nF +80/-20% 50V
2128	4822 124 41579	10µF 20% 50V
2129	4822 124 40242	1µF 20% 63V
2130	4822 126 11585	22nF +80/-20% 25V
2131	4822 122 33325	470nF 16V
2132	4822 122 33325	470nF 16V
2133	4822 124 40242	1µF 20% 63V
2134	4822 126 13188	15nF 5% 63V
2135	4822 122 32927	220nF +80/-20% 50V
2136	4822 126 13188	15nF 5% 63V
2137	4822 122 32927	220nF +80/-20% 50V
2138	4822 124 41576	2,2µF 20% 50V
2140	4822 121 51252	470nF 5% 63V
2141	4822 122 31947	100nF 20% 63V
2142	4822 122 31947	100nF 20% 63V
2143	4822 122 32927	220nF +80/-20% 50V
2144	4822 124 40242	1µF 20% 63V
2145	4822 122 33575	220pF 5% 50V
2147	4822 122 33575	220pF 5% 50V
2148	4822 122 33809	22nF 20% 50V
2150	4822 122 31947	100nF 20% 63V
2151	4822 126 14236	50V 15pF 5%
2152	4822 126 13695	82pF 1% 63V
2158	4822 122 31947	100nF 20% 63V
2160	4822 122 32139	12pF 2% 63V
2161	5322 122 34123	1nF 10% 50V
2162	4822 124 81151	22µF 50V

RESISTORS

3103	4822 051 20008	0R Jumper 0805
3104	4822 051 10102	1k 2% 0,25W
3107	4822 051 20829	82R 5% 0,1W
3108	4822 117 11449	2k2 1% 0,1W
3109	4822 117 11449	2k2 1% 0,1W
3123	4822 051 10008	0R 5% 0,25W
3124	4822 051 10008	0R 5% 0,25W
3125	4822 116 83864	10k 5% 0,5W
3128	4822 116 52256	2k2 5% 0,5W
3129	4822 051 20008	0R Jumper 0805
3130	4822 051 10008	0R 5% 0,25W
3131	4822 051 10008	0R 5% 0,25W
3132	4822 051 20008	0R Jumper 0805
3134	4822 051 20223	22k 5% 0,1W
3137	4822 117 10833	10k 1% 0,1W
3138	4822 051 20008	0R Jumper 0805
3139	4822 051 10008	0R 5% 0,25W
3140	4822 051 20331	330R 5% 0,1W
3141	4822 051 20563	56k 5% 0,1W
3142	4822 100 11163	Trimmer 100k 30% 0,1W
3143	4822 051 20223	22k 5% 0,1W
3144	4822 051 10102	1k 2% 0,25W
3145	4822 117 11449	2k2 1% 0,1W
3146	4822 051 20479	47R 5% 0,1W
3150	4822 051 20472	4k7 5% 0,1W
3151	4822 051 20683	68k 5% 0,1W
3152	4822 051 20471	470R 5% 0,1W
3153	4822 051 20471	470R 5% 0,1W
3154	4822 116 83872	220R 5% 0,5W
3155	4822 116 52219	330R 5% 0,5W
3158	4822 116 83883	470R 5% 0,5W
3159	4822 116 83883	470R 5% 0,5W
3160	4822 116 83883	470R 5% 0,5W
3161	4822 116 83883	470R 5% 0,5W
3162	4822 051 20224	220k 5% 0,1W
3163	4822 051 10008	0R 5% 0,25W
3164	4822 052 10478 ⚠	4R7 5% 0,33W
3165	4822 051 10008	0R 5% 0,25W
3167	4822 116 83872	220R 5% 0,5W
3169	4822 051 20008	0R Jumper 0805
3171	4822 051 20008	0R Jumper 0805
3172	4822 051 10008	0R 5% 0,25W
3173	4822 051 20008	0R Jumper 0805
3176	4822 051 20008	0R Jumper 0805
3177	4822 051 20223	22k 5% 0,1W
3181	4822 051 10008	0R 5% 0,25W
3183	4822 051 10008	0R 5% 0,25W
3184	4822 051 10008	0R 5% 0,25W
3185	4822 051 10008	0R 5% 0,25W
3186	4822 051 10102	1k 2% 0,25W
3188	4822 051 10008	0R 5% 0,25W
3192	4822 051 20008	0R Jumper 0805
3197	4822 051 20472	4k7 5% 0,1W

COILS & FILTERS

5102	4822 157 71634	MW AERIAL
5103	4822 157 71635	LW AERIAL
5107	4822 157 11443	FM Discriminator 10,7MHz
5109	4822 157 71639	Ceram Filter 10,7MHz
5110	4822 242 70665	Ceram Filter 10,7MHz
5111	4822 158 60511	AM-IF Filter 450kHz
5112	4822 157 70302	AM-IF Filter 450kHz
5114	4822 157 70302	AM-IF Filter 450kHz
5115	4822 157 71636	Anti-Birdy Filter
5121	4822 242 10261	X'tal Resonator 75kHz
5122	4822 157 60517	RF Coil AM
5123	4822 157 60517	RF Coil AM

DIODES

6105	4822 130 83075	HN1V02H-B
6107	4822 130 34488	BZX79-B11
6120	4822 130 30621	1N4148

TRANSISTORS & INTEGRATED CIRCUITS

7101	4822 209 90315	TEA5762H/V1
7103	4822 130 42513	BC858C
7104	5322 130 44779	BC338-40
7105	5322 130 44779	BC338-40
7109	5322 130 41983	BC858B
7110	5322 130 41983	BC858B
7122	5322 130 42136	BC848C
7124	5322 130 42136	BC848C

Note: Only the parts mentioned in this list are normal service spare parts.

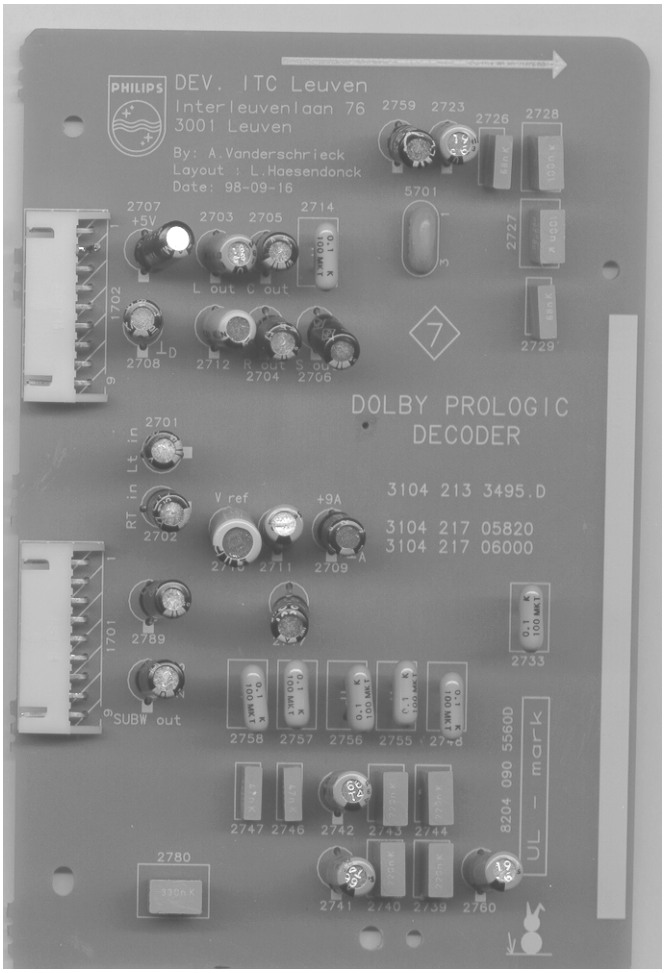

DOLBY PROLOGIC BOARD

TABLE OF CONTENTS

Test description 8-2
Circuit diagram 8-5
Component layout 8-6
Partslist 8-7

DOLBY PROLOGIC TEST DESCRIPTION

- The intention of this description is to explain the most important performance measurements for **DPL** (**D**olby **P**ro-**L**ogic) sets for service.

- Test instruments (recommended) :
  - Dolby Prologic test CD 4822 395 10216
  - AC mv meters (4x) L, C, R, S
  - Oscilloscope (double beam)
  - Distortion meter
  - CD player.

WARNING: Be sure that the ground connection (-) of each instrument is <u>not</u> connecteded with the safety earth ⊥ connection. To avoid damage to output amplifiers (balance type) Use only cinch (input) ground connection

STARTING CONDITION :

- Replace the loudspeakers for all four output amplifiers with loud resistors according the output impedance for each amplifier (or use 8 Ω as standard loudresistor).
- Set volume to min. position
- Set Bass + Treble at 0 db .
- Select Surround <Prologic> .
- Select "LARGE" size for Center channel.
- Set time delay in Surround channel at 20 msec.
- Dolby Prologic test CD in CD player.

SERVICE TEST DESCRIPTION

Test 1 : *Output and balance setting for all four channels*
Select track 2 :
Adjust L, C, R and S for ≈ 1W output on the loudresistor with master volume. Adjust with L/R balance and Centre/Surround "TRIM" all four channels to equal level (equal meter readings)
Note: 1Watt output corresponds with 2.83V across 8 Ω
$P = U^2/R \rightarrow U = \sqrt{P \times R} = \sqrt{1 \times 8} = 2{,}83V$

Test 2 : *Frequency response for Left and Right channel*
Requirement : -3 dB points at ≤ 50 Hz and ≥ 15 kHz
Select track 3:
measure (and note) the overall gain of Left channel across the load resistor.
Select track 4:
measure (and note) the overall gain on Right channel across the load resistor.

Test 3 : *Frequency response for Center channel*
<u>2 possibilitie :</u>
1- Center size "LARGE" requirements : -3 dB at ≤ 50 Hz and ≥ 15 kHz (same as L/R requirements)
2- Center size "SMALL" requirements : -3 dB point at ± 100 Hz and ≥ 15 kHz (the difference is the roll-off behaviour of the bass frequencies).
Select track 5 :
measure (and note) the overall gain of Center channel across the load resistor in "LARGE" size (only in sets with this option) and repeat this measurement in "SMALL" size.

Test 4 : *Frequency response for Surround channel*
Surround requirements : -3 dB point at ≤ 100 Hz and ± 7 kHz (6 kHz ... 8 kHz)
The difference is the roll-off behaviour of the high treble frequencies.
Select track 6 :
measure (and note) the overall gain of Surround channel across the loud resistor.

8-2

Test 5 : *Modified Dolby B type NR decoding freq. response of the Surround channel*
Requirement : Roll off behaviour at ± 5 kHz related to 100 Hz. In this case use 100 Hz as 0 dB reference gain.
Select track 14:
measure (and note) the overall gain of Surround channel across the load resistor.
Note : The output level on track 14 = <u>-35 dB</u> below the 1W output reference of the Surround channel.

Test 6 : *Total harmonic distortion measurements for Left, Center, Right, Surround channels for 1 Watt output*
Note : If necessary use a special CD test filter 20 Hz ... 20 kHz between the output channel and the distortion meter to prevent spurrious products out of audio waves (> 20 kHz) from to the CD player in test.
Select track 3 :
Measure distortion at 1 kHz across the Left channel.
Output load resistor : requirement THD < 0,3 %
Select track 4 :
Measure distortion at 1 kHz across the Right channel.
Output load resistor : requirement THD < 0,3 %
Select track 5 :
Measure distortion at 1 kHz across the Center channel.
Output load resistor : requirements THD < 0,3 %
Center size "LARGE" (if exists) and repeat for center size "SMALL"
Select track 6 :
Measure distortion at 1 kHz across the Surround channel load resistor.
Note : time delay setting = 20 msec.
Requirement THD = < 0,5 %

Test 7: *Signal to noise measurements for Left output amplifier*
Select track 3 :
Use 1W output at 1 kHz on the Left channel output loud resistor as 0 dB reference.
Select track 13 :
(silence) and measure the S/Nratio.--->with ccir/arm filter
Requirements for Left channel ≤ -65 dB

Test 8 : *Signal to noise measurements for Right output amplifier*
Select track 4 :
Use 1W output at 1 kHz on the Right channel output loud resistor as 0 dB reference.
Select track 13 :
(silence) and measure the S/N ratio.
Requirement for Right channel ≤ -65 dB

Test 9 : *Signal to noise measurements for Center output amplifier*
Select track 5 :
Uuse 1W output at 1 kHz on the Center channel (size "SMALL" or "LARGE")
Select track 13 :
(silence) and measure the S/N ratio.
Requirement for Center channel (size "SMALL" or "LARGE") ≤ -65 dB

Test 10 : *Signal to noise measurements for Surround output amplifier*
Select track 6 :
Use 1W output at 1 kHz on the Surround channel output loud resistor as 0 dB reference.
Select track 13 :
(silence) and measure the S/N ratio.
Requirement for Surround channel ≤ -55 dB (in all positions between 15 msec ... 30 msec in sets with variable time delay).

Cross-talk (channel separation) between adjacent and opposite channels
2 possibilities :
<u>1- Centre size "LARGE"</u> (use 1 kHz tone)

Test 11a:
Select track 3 :
For 1 kHz in Left channel and measure the crosstalk in Center, Right, Surround.
Requirement : < -25 dB

Test 12a :
Select track 4 for 1 kHz in Right channel and measure the crosstalk in Surround , Left, Center.
Requirement : < -25 dB

Test 13a :

Select track 5 :
For 1 kHz in Center channel and measure the crosstalk in Left, Right, Surround.

Requirement : < -25 dB

Test 14a :

Select track 6 :
For 1 kHz in Surround channel and measure the crosstalk in Left, Center, Right.
Requirement : < -25 dB

2- Centre mode "normal" (use 3 kHz or 1 kHz tone)

Test 11b :

Select track 3 :
For 3 kHz in Left channel and measure the crosstalk in Center, Right, Surround
Requirement : < -25 dB

Test 12b :

Select track 4 :
For 3 kHz in Right channel and measure the crosstalk in Surround, Left, Center
Requirement : < -25 dB

Test 13b :

Select track 5 :
For 3 kHz in Centre channel and measure the crosstalk in Left, Right, Surround
Requirement : < -25 dB

Test 14b :

Select track 6 :
For 1 kHz in Surround channel and measure the crosstalk in Left, Center, Right
Requirement : < -25 dB

Inputs overload test (headroom to visible clipping)

General :

Before starting these tests set Master Volume -15 dB lower to make a new output reference (1W on loudresistors).
Requirement : check on scope for no visible signal clipping or measure THD <1,5 %

Test 15 :

Select track 7 :
Check the Left output signal between 20 Hz ... 20 kHz

Test 16 :

Select track 8 :
Check the Right output signal between 20 Hz ... 20 kHz

Test 17 :

Select track 9 :
Check the Center output signal
CENTER "SMALL" between 100 Hz ... 20 kHz
CENTER "LARGE" between 20 Hz ... 20 kHz

Test 18 :

Select track 11 :
Check the Surround output signal between 50 Hz ... 7 kHz

Test 19 : *Center Mode Check*

Select Center size "SMALL".
a - Select track 5 at 1 kHz :
Adjust the Center output again with master volume for 1W output as 0 dB reference.
b - Select on track 5 the 100 Hz :
Signal to check the roll-off behaviour at -3 dB on the Center output
c - Select on track 5 the 50 Hz :
Signal and measure on the Left and Right output channels.
The lost 50 Hz signal on the Center output is equally splitted and added to the L and R channels.

Test 20 : *Center Mode Check*

Select Center size "LARGE"
Repeat test 19 a,b and c
The difference is no roll off behaviour at 100 Hz (Center) and no splitted bass (50 Hz signal) added to L and R.

8-3

Test 21 : *Center Mode Check*

Select Center mode phantom = Center speaker "No"
Select track 5 (20 Hz ... 20 kHz) :
No output signals on the Center output or at least minimum -40 dB related to 1W outputs.
Measure now on the Left and Right output channels : the lost Center signals are equally splitted and added to these left and right channels (- 3 dB)

Test 22 : *3 CH mode control*

Select Front 3 stereo (Rear speaker "No")
Select track 6 (100 Hz ... 7 kHz):
No output signals on the Surround output channel or at least minimum -40 dB related to 1W output.
Measure now at the Left and Right output channels : the lost Surround signals are equally splitted and added to the Left and Right output channels (-3 dB)

Test 23 : *2 CH mode control (stereo)*

Select Surround "OFF"
Select track 5 :
No output on Centre output channel
Select track 6 :
No output on Surround output channel

Test 24 : *Time delay control in Surround channel*

- Principle description encoded burst signal spots (see fig. 1)
  1- Tone burst 1 kHz during 1 msec with interval time at 20 msec are given at the same time to the L_t ; R_t inputs. (in phase 0∞)
  2- The next tone burst is given at the same time to the L_t R_t input, but in reverse phase to the R_t input (180∞).
  These 2 tone bursts are repeated continuously during 2 minutes.
- Principle description decoded signal spots in Center/Surround channel
  - In case of 20 msec time delay mode the results are shown in fig. 1 in Center and Surround channel.
    The center spots in Center channel can be used as ìMarkerî spots (trigger signal) → repeated every 40 msec.
    The delayed surround spots occur at the same time as the center spots (markers)
  - When time delay mode is changed to 15 msec the delayed surround spots move to the left with respect to the centre mark spots.
  - When time delay mode is changed to 25 msec or 30 msec the delayed surround spots move to the right with respect to the center spots.
  - In case of no time delay ! (faulty condition) the surround spots fall just between 2 center markers spots (20 msec)
- **How to check with a double beam scope**

WARNING: Be sure that the ground connection (-) of each instrument is not connecteded with the safety earth ⊥ connection. To avoid damage to output amplifiers (balance type) Use only cinch (input) ground connection

- Select Pro Logic size "LARGE" or "SMALL" (phantom in case of no Center output.)
- Select 20 msec time delay in Surround channel.
- Adjust scope at 5 msec/division and trigger at A input
- Connect input A to Center channel (or L or R in case of phantom mode)
- Connect input B to Surround channel
- Adjust trigger level and the X position to set pulse A in the middle of the scope . see fig.2 (if L or R used in phantom mode choose the largest (amplitude) pulse. see fig 3

Select track 24:
Pulse A = 20 msec marker
Pulse B = delayed surround signal pulse

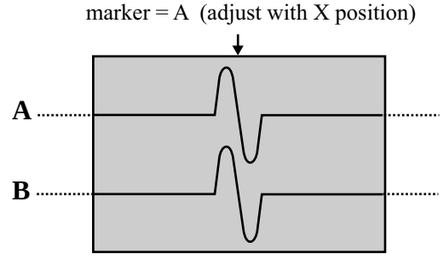

20msec time delay

Fig 2

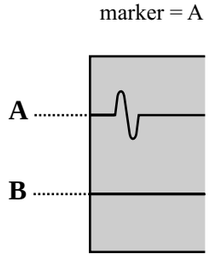

20msec in case of phantom mode

Fig 3

Change time delay to 15 msec (only in versions with variable delay).
he surround pulse in channel B moves to the left with respect to side from center marker (channel A) position.
Change time delay to 25 or 30 msec (versions with variable delay).
The surround pulse in channel B moves to the right with respect to center marker (channel A) position.

Time delay with track 6

Alternative methode :
The functional operation of the time delay can be made visible with a lisajous figure, with an single beam scope.
Connect X-direction on Surround output
Connect Y-direction on Left or Right output/input.
Note : be careful and use only 1 ground connected to scope.
Select track 6 (surround test) :
Make the lisajous figure visible on the scope (amplitude adjust) see fig. 4

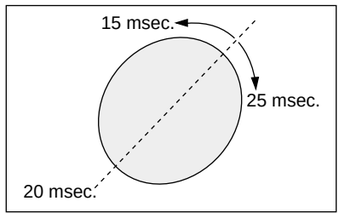

Fig 4 Lisajous out of phase
Time delay = OK

Note : in sets with variable time delay the ellipse of the lisajous figure must be always open. Changing the time delay changes the direction of the circle accordingly.

CHANNEL modes:

Surround OFF (Stereo) 2 channel mode
Signal on :L out (2703) and R out (2704)

Surround ON
-Prologic 4 channel mode → all four outputs are used
Signal on : L out (2703), R out (2704), Center out (2705), Surround (2706).

-Front 3 stereo → No surround speaker available
The surround information is equelly to the left and right outputs.
Signal on : L out (2703), R out (2704), Center out (2705).

-HALL
Signal on : L out (2703), R out (2704), Surround (2706).

Subwoofer out. not in all versions
Signal on : Subwoofer out (2788).

(....) as indicated on the component side of the DPL decoder board.

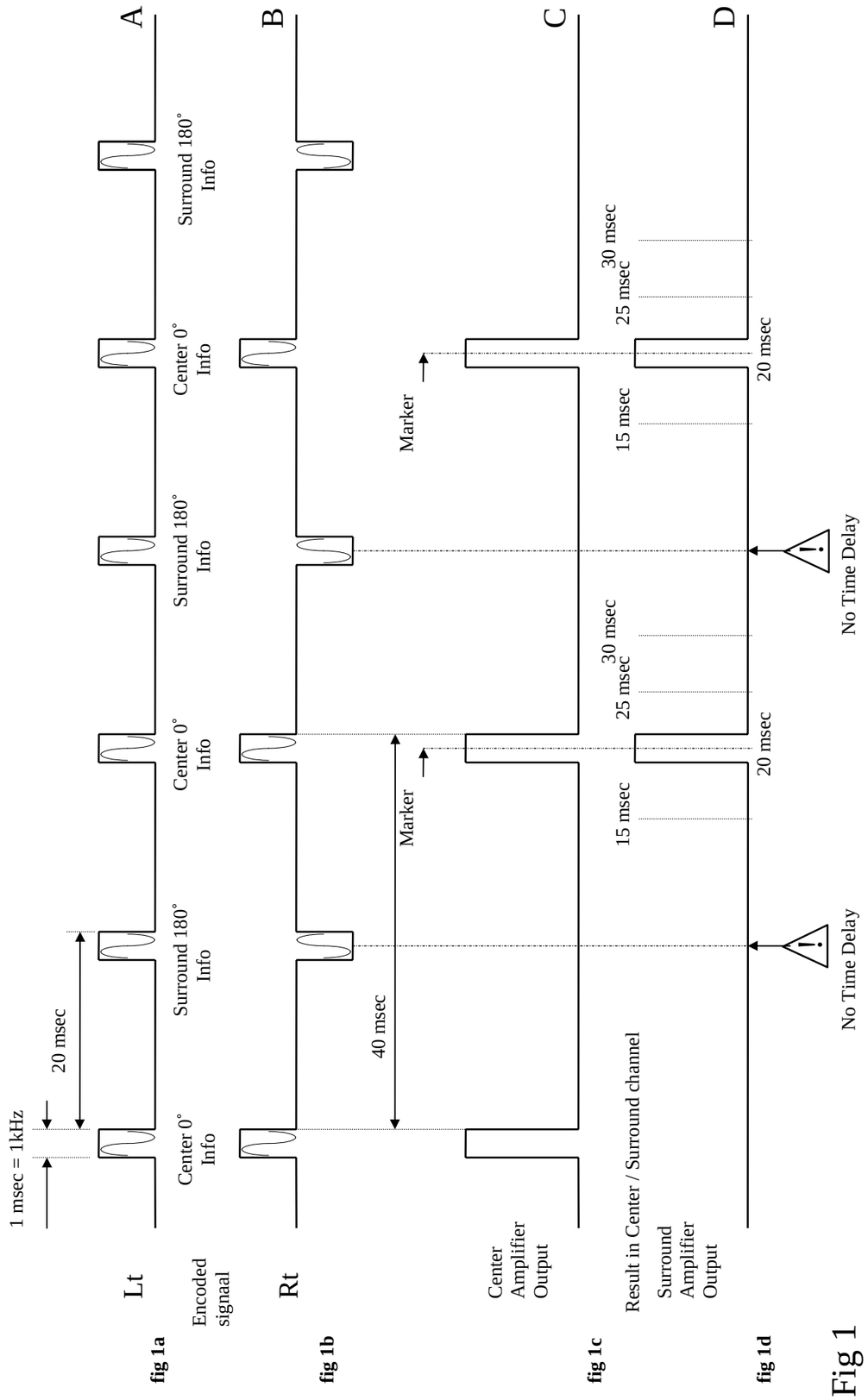

Fig 1

8-5

DOLBY PROLOGIC - CIRCUIT DIAGRAM

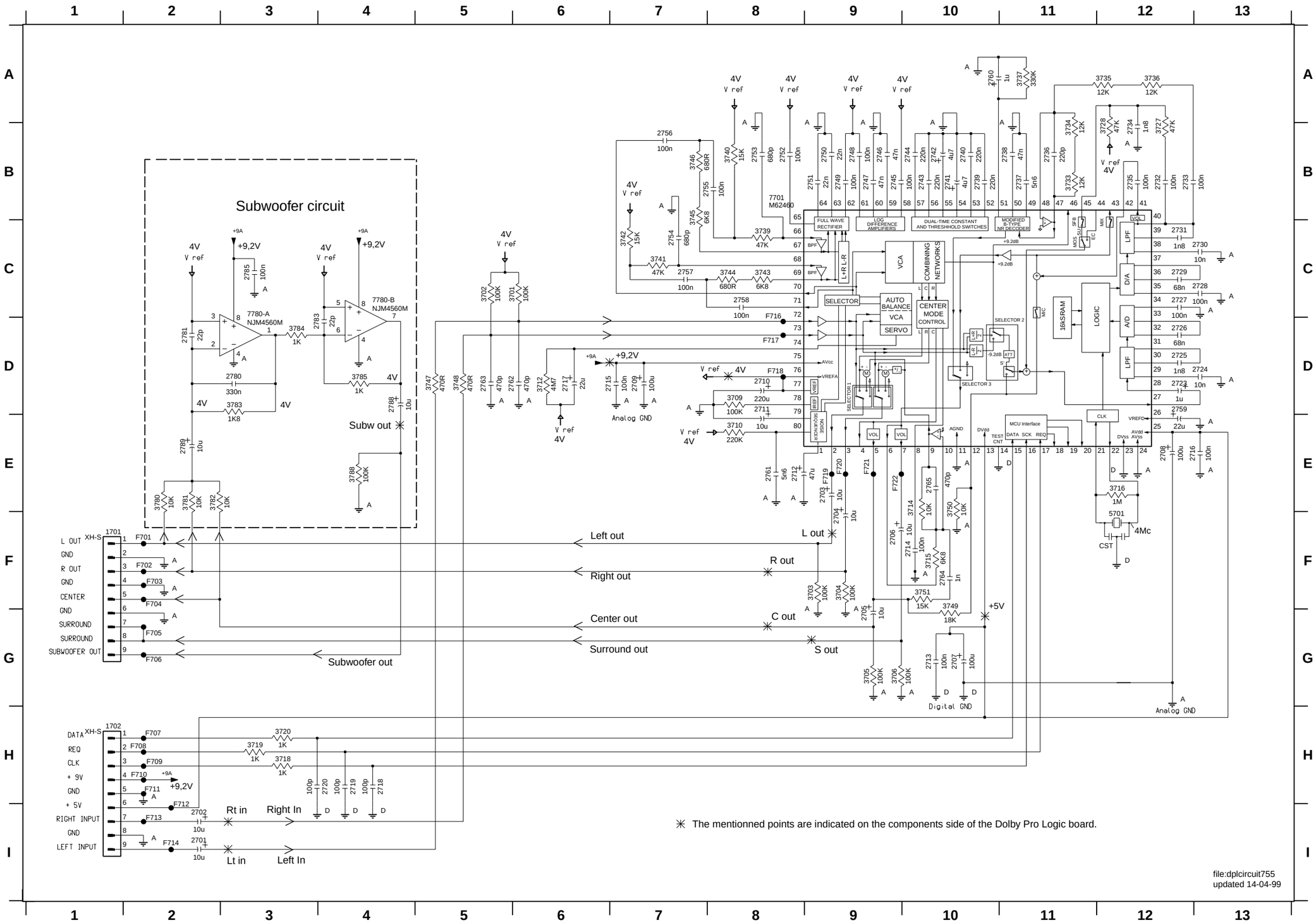

✳ The mentionned points are indicated on the components side of the Dolby Pro Logic board.

1701 F1
1702 H1
2701 I2
2702 I2
2703 E9
2704 F9
2705 G9
2706 F9
2707 G10
2708 E12
2709 D7
2710 D8
2711 D8
2712 E8
2713 G10
2714 F10
2715 D7
2716 E13
2717 D6
2718 H4
2719 H4
2720 H4
2723 D12
2724 D13
2725 D12
2726 D12
2727 C12
2728 C13
2729 C12
2730 C13
2731 C12
2732 B12
2733 B12
2734 B12
2735 B12
2736 B11
2737 B11
2738 B11
2739 B10
2740 B10
2741 B10
2742 B10
2743 B10
2744 B10
2745 B9
2746 B9
2747 B9
2748 B9
2749 B9
2750 B9
2751 B9
2752 B8
2753 B8
2754 C7
2755 B8
2756 B7
2757 C7
2758 C8
2759 D12
2760 A10
2761 E8
2762 D6
2763 D5
2764 F10
2765 E10
2780 D3
2781 D2
2783 D4
2785 C3
2788 D4
2789 E2
3701 C6
3702 C5
3703 F9
3704 F9
3705 G9
3706 G9
3709 D8
3710 E8
3712 D6
3714 E10
3715 F10
3716 E12
3718 H3
3719 H3
3720 H3
3727 B12
3728 B12
3733 B11
3734 B11
3735 A12
3736 A12
3737 A11
3739 C8
3740 B8
3741 C7
3742 C7
3743 C8
3744 C8
3745 B7
3746 B7
3747 D5
3748 D5
3749 F10
3750 E10
3751 F10
3780 E2
3781 E2
3782 E2
3783 D3
3784 D3
3785 D4
3788 E4
4720 H13
4721 H13
5701 F12
7701 B8
7780-A C3
7780-B C4
F701 F2
F702 F2
F703 F2
F704 F2
F705 G2
F706 G2
F707 H2
F708 H2
F709 H2
F710 H2
F711 H2
F712 I2
F713 I2
F714 I2
F716 D8
F717 D8
F718 D8
F719 E9
F720 E9
F721 E9
F722 E9
F723 H13
F724 H13
F725 H13

DOLBY PROLOGIC BOARD - COMPONENT VIEW

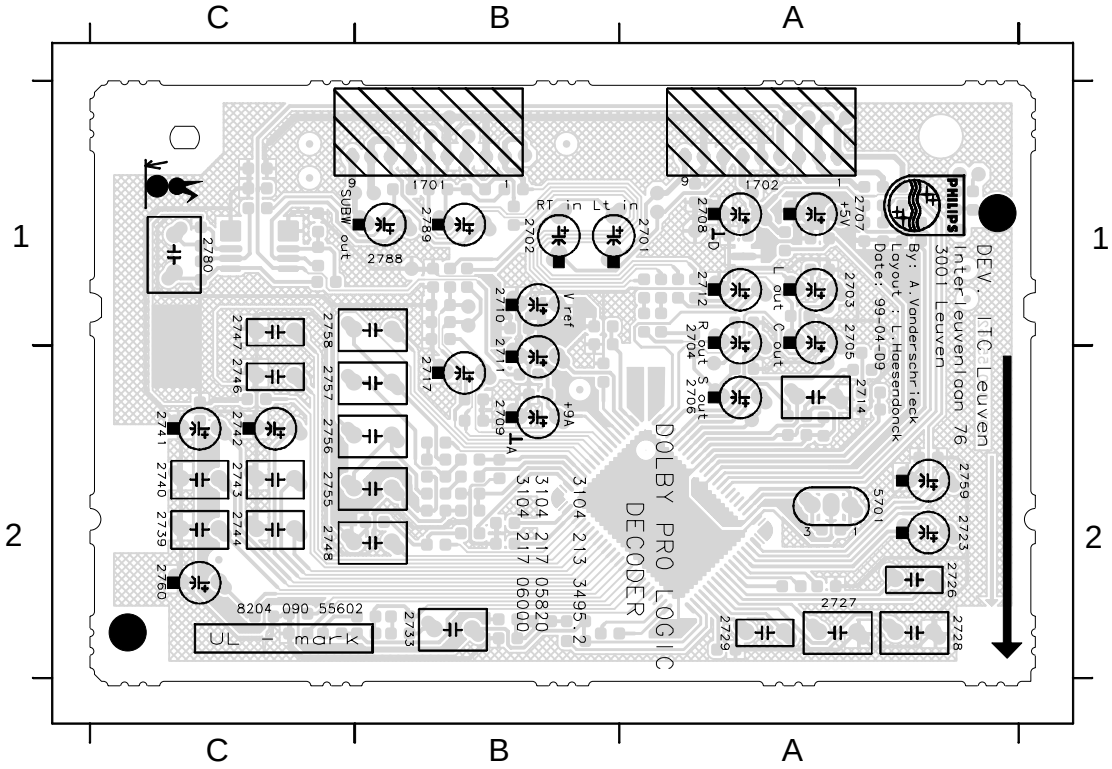

1701 B1
1702 A1
2701 A1
2702 B1
2703 A1
2704 A1
2705 A1
2706 A2
2707 A1
2708 A1
2709 B2
2710 B1
2711 B2
2712 A1
2714 A2
2717 B2
2723 A2
2725 A2
2726 A2
2727 A2
2728 A2
2729 A2
2733 B2
2739 C2
2740 C2
2741 C2
2742 C2
2743 C2
2744 C2
2746 C2
2747 C1
2748 C2
2755 C2
2756 C2
2757 C2
2758 C1
2759 A2
2760 C2
2780 C1
2788 B1
2789 B1
5701 A2

DOLBY PROLOGIC BOARD - COPPER SIDE VIEW

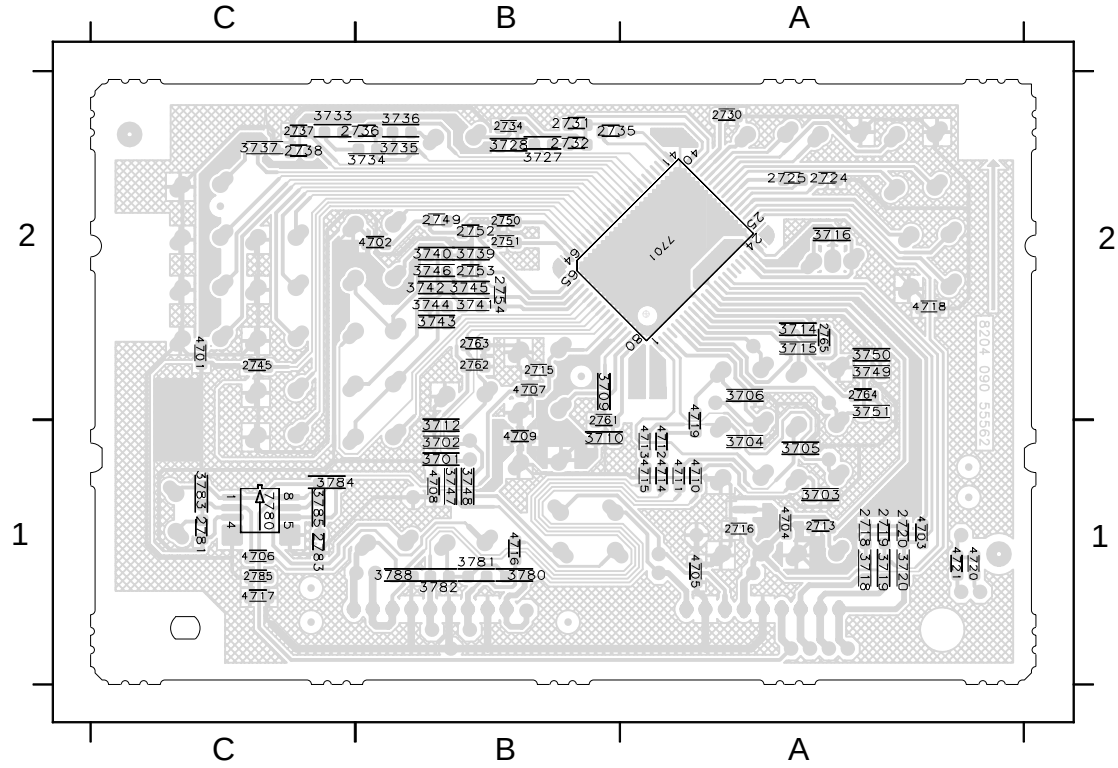

2713 A1
2715 B2
2716 A1
2718 A1
2719 A1
2720 A1
2724 A2
2725 A2
2730 A2
2731 B2
2732 B2
2734 B2
2735 B2
2736 B2
2737 C2
2738 C2
2745 C2
2749 B2
2750 B2
2751 B2
2752 B2
2753 B2
2754 B2
2761 A2
2762 B2
2763 B2
2764 A2
2765 A2
2781 C1
2783 C1
2785 C1
3701 B1
3702 B1
3703 A1
3704 A1
3705 A1
3706 A2
3709 B2
3710 B1
3712 B2
3714 A2
3715 A2
3716 A2
3718 A1
3719 A1
3720 A1
3727 B2
3728 B2
3733 C2
3734 B2
3735 B2
3736 B2
3737 C2
3739 B2
3740 B2
3741 B2
3742 B2
3743 B2
3744 B2
3745 B2
3746 B2
3747 B1
3748 B1
3749 A2
3750 A2
3751 A2
3780 B1
3781 B1
3782 B1
3783 C1
3784 C1
3785 C1
3788 B1
4701 C2
4702 C2
4703 A1
4704 A1
4705 A1
4706 C1
4707 B2
4708 B1
4709 B1
4710 A1
4711 A1
4712 A1
4713 A1
4714 A1
4715 A1
4716 B1
4717 C1
4718 A2
4719 A2
4720 A1
4721 A1
7701 A2
7780 C1

ELECTRICAL PARTSLIST - DOLBY PROLOGIC BOARD

MISCELLANEOUS

1003	4822 214 13051	DPL MODULE

CAPACITORS

2701	4822 124 41579	10UF 20% 50V
2702	4822 124 41579	10UF 20% 50V
2703	4822 124 41579	10UF 20% 50V
2704	4822 124 41579	10UF 20% 50V
2705	4822 124 41579	10UF 20% 50V
2706	4822 124 41579	10UF 20% 50V
2707	4822 124 41584	100UF 20% 10V
2708	4822 124 41584	100UF 20% 10V
2709	4822 124 41584	100UF 20% 10V
2710	4822 124 11912	220UF 20% 6,3V
2711	4822 124 41579	10UF 20% 50V
2712	4822 124 40433	47UF20% 25V
2713	4822 126 13196	100NF 10% 0805 X7R 2
2714	5322 121 42386	100NF 5% 63V
2715	4822 126 13196	100NF 10% 0805 X7R 2
2716	4822 126 13196	100NF 10% 0805 X7R 2
2717	4822 124 81151	22UF 50V
2718	5322 122 32531	100PF 5%NP0 50V
2719	5322 122 32531	100PF 5%NP0 50V
2720	5322 122 32531	100PF 5%NP0 50V
2723	4822 124 40242	1UF20% 63V
2724	4822 122 33177	10NF 20% X7R 50V
2725	4822 126 10847	1,8NF10%X7R 63V
2726	5322 121 42465	68NF 5% 63V
2727	5322 121 42386	100NF 5% 63V
2728	5322 121 42386	100NF 5% 63V
2729	5322 121 42465	68NF 5% 63V
2730	4822 122 33177	10NF 20% X7R 50V
2731	4822 126 10847	1,8NF10%X7R 63V
2732	4822 126 13196	100NF 10% 0805 X7R 2
2733	5322 121 42386	100NF 5% 63V
2734	4822 126 10847	1,8NF10%X7R 63V
2735	4822 126 13196	100NF 10% 0805 X7R 2
2736	4822 122 33575	220PF 5%NPO 50V
2737	4822 122 32646	5,6NF10%X7R 50V
2738	4822 122 33797	47NF20%Y5V 50V
2739	4822 121 42408	220NF 5% 63V
2740	4822 121 42408	220NF 5% 63V
2741	4822 124 40769	4,7UF20% 100V
2742	4822 124 40769	4,7UF20% 100V
2743	4822 121 42408	220NF 5% 63V
2744	4822 121 42408	220NF 5% 63V
2745	4822 126 13196	100NF 10% 0805 X7R 2
2746	4822 121 43526	47NF 5% 250V
2747	4822 121 43526	47NF 5% 250V
2748	5322 121 42386	100NF 5% 63V
2749	4822 126 13196	100NF 10% 0805 X7R 2
2750	5322 122 32654	22NF10%X7R 63V
2751	5322 122 32654	22NF10%X7R 63V
2752	4822 126 13196	100NF 10% 0805 X7R 2
2753	4822 122 32535	680PF10%X7R 63V
2754	5322 126 10184	680P 5% NPO 50V.
2755	5322 121 42386	100NF 5% 63V
2756	5322 121 42386	100NF 5% 63V
2757	5322 121 42386	100NF 5% 63V
2758	5322 121 42386	100NF 5% 63V
2759	4822 124 81151	22UF 50V
2760	4822 124 40242	1UF20% 63V
2761	4822 122 32646	5,6NF10%X7R 50V
2762	5322 122 32268	470PF 10% 50V
2763	5322 122 32268	470PF 10% 50V
2780	5322 121 42661	330NF 5% 63V
2781	5322 122 32658	22PF 5% 50V
2783	5322 122 32658	22PF 5% 50V
2785	4822 126 13196	100NF 10% 0805 X7R 2
2788	4822 124 41579	10UF 20% 50V
2789	4822 124 41579	10UF 20% 50V

RESISTORS

3701	4822 051 20104	100K00 5% 0,1W
3702	4822 051 20104	100K00 5% 0,1W
3703	4822 051 20104	100K00 5% 0,1W
3704	4822 051 20104	100K00 5% 0,1W
3705	4822 051 20104	100K00 5% 0,1W
3706	4822 051 20104	100K00 5% 0,1W
3709	4822 051 20104	100K00 5% 0,1W
3710	4822 117 13579	220K 1% 0.1W RC12H 0
3712	4822 051 20475	4M70 5% 0,1W
3714	4822 117 10833	10K 1% 0,1W
3715	4822 117 10833	10K 1% 0,1W
3716	4822 051 20105	1M00 5% 0,1W
3718	4822 051 10102	1K00 2% 0,25W
3719	4822 051 10102	1K00 2% 0,25W
3720	4822 051 10102	1K00 2% 0,25W
3727	4822 117 10834	47K 1% 0,1W
3728	4822 051 20184	180K00 5% 0,1W
3733	4822 117 11383	12K 1% 0,1W
3734	4822 117 11383	12K 1% 0,1W
3735	4822 117 11383	12K 1% 0,1W
3736	4822 117 11383	12K 1% 0,1W
3737	4822 051 20334	330K00 5% 0,1W
3739	4822 117 10834	47K 1% 0,1W
3740	4822 051 20153	15K00 5% 0,1W
3741	4822 117 10834	47K 1% 0,1W
3742	4822 051 20153	15K00 5% 0,1W
3743	4822 117 11507	6K8 1% 0,1W
3744	4822 051 20681	680R00 5% 0,1W
3745	4822 117 11507	6K8 1% 0,1W
3746	4822 051 20681	680R00 5% 0,1W
3747	4822 051 20471	470R00 5% 0,1W
3748	4822 051 20471	470R00 5% 0,1W
3780	4822 117 10833	10K 1% 0,1W
3781	4822 117 10833	10K 1% 0,1W
3782	4822 117 10833	10K 1% 0,1W
3783	4822 051 20182	1K80 5% 0,1W
3784	4822 051 10102	1K00 2% 0,25W
3785	4822 051 10102	1K00 2% 0,25W
3788	4822 051 20104	100K00 5% 0,1W

JUMPERS

4701	4822 051 20008	0R00 JUMP. (0805)
to		
4720	4822 051 20008	0R00 JUMP. (0805)

FILTERS

5701	4822 242 72527	CST4,00MGW-TF01

ICs

7701	4822 209 17347	M62460FP
7780	4822 209 83357	NJM4560M

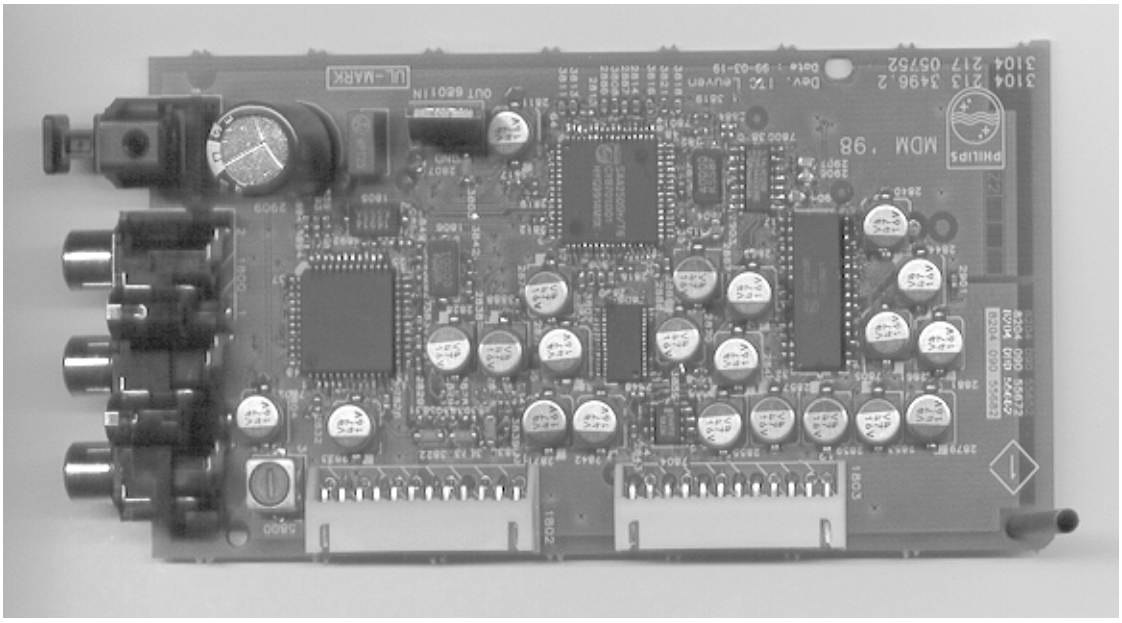

MULTI-CHANNEL DECODING MODULE

TABLE OF CONTENTS

Troubleshooting 9-2
Block-diagram 9-3
Partslist 9-4

MULTI-CHANNEL DECODING MODULE - Troubleshooting

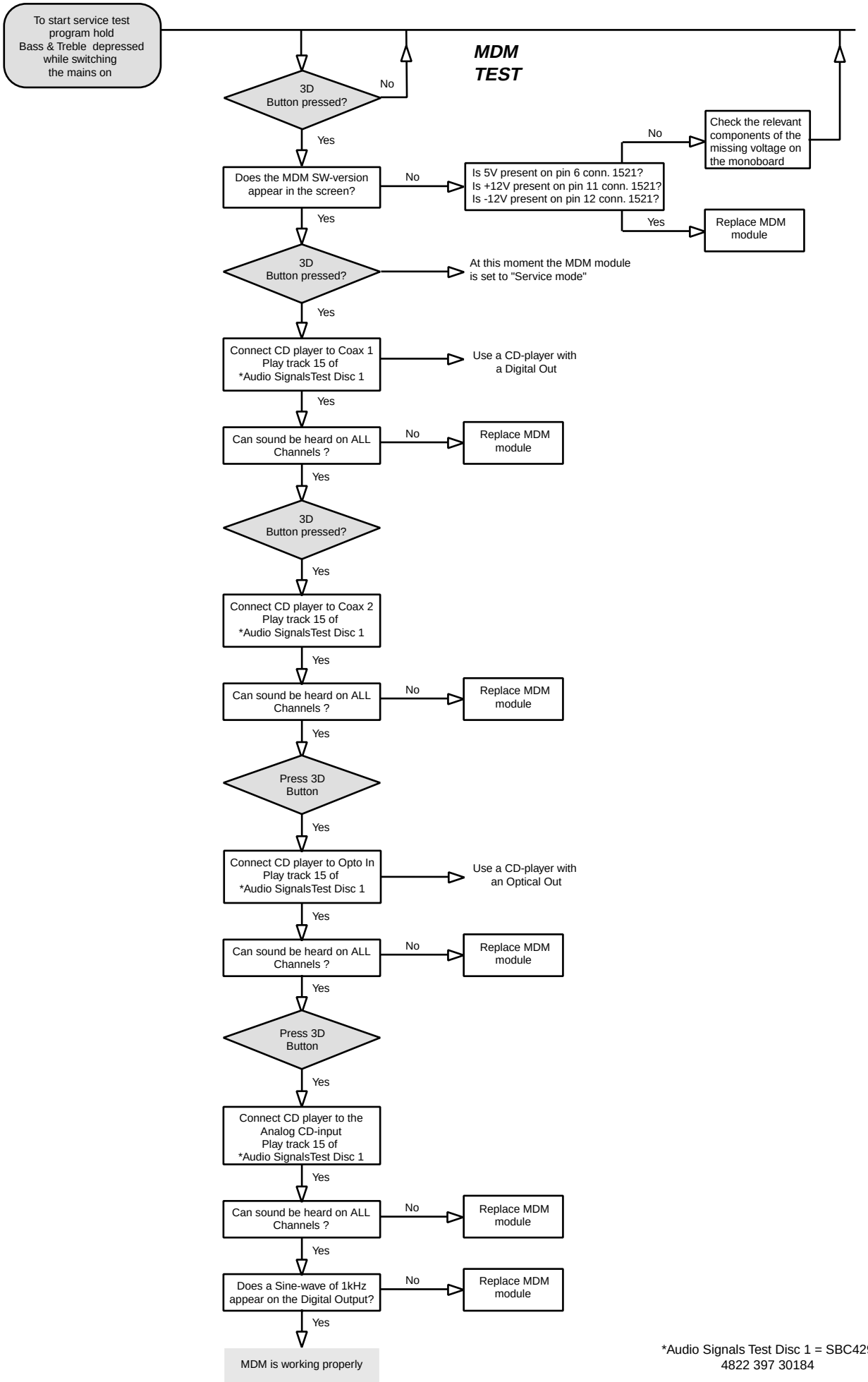

*Audio Signals Test Disc 1 = SBC429
4822 397 30184

BLOCK-DIAGRAM

MULTI-CHANNEL DECODING MODULE '98

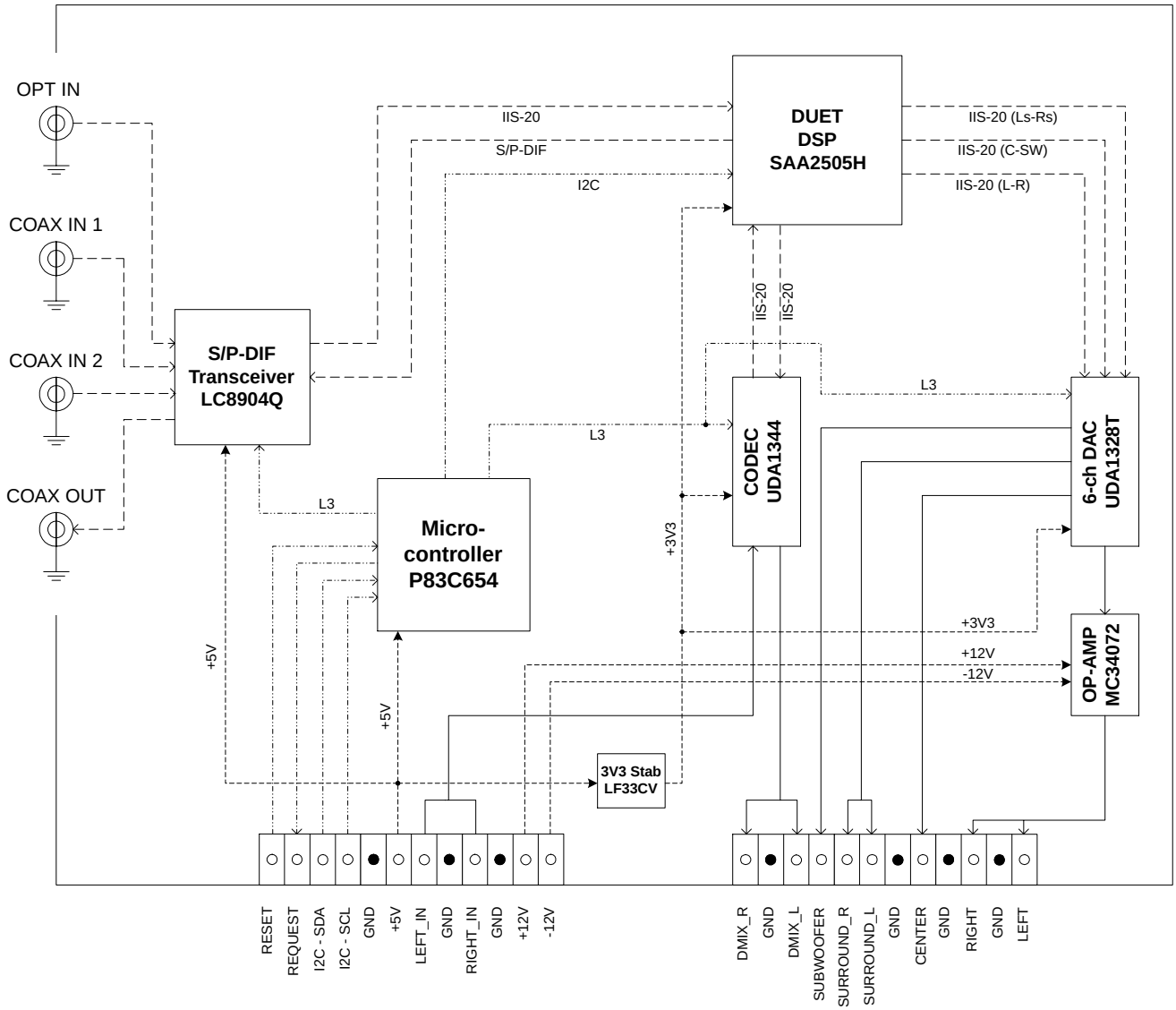

Signals

Control

Digital Audio

Analog Audio

Supply

Terms

DUET: Philips Dual Core DSP
DSP: Digital Signal Processor
DAC: Digital to Analog Converter
ADC: Analog to Digital Converter
CODEC: Combined ADC and DAC
S/P-DIF: Sony/Philips Digital Interface
Transceiver: Transmitter/Receiver
IIS-20: Inter-IC Sound (20 bit)
I2C: Inter-IC Communication
L3 : 3-line Communication
OP-AMP: Operational Amplifier
Stab: Stabiliser
DMIX: Downmix
OPTO: Optical Connector
COAX: Cinch Connector

ELECTRICAL PARTSLIST - MDM MODULE

1003	3104 217 05750	MDM Module
1800	4822 267 31729	Connector
1801	4822 267 31448	Connector
6800	4822 218 11487	GP1F32R
6801	4822 209 16978	LF33CV

Note: Only the parts mentioned in this list are normal service parts.

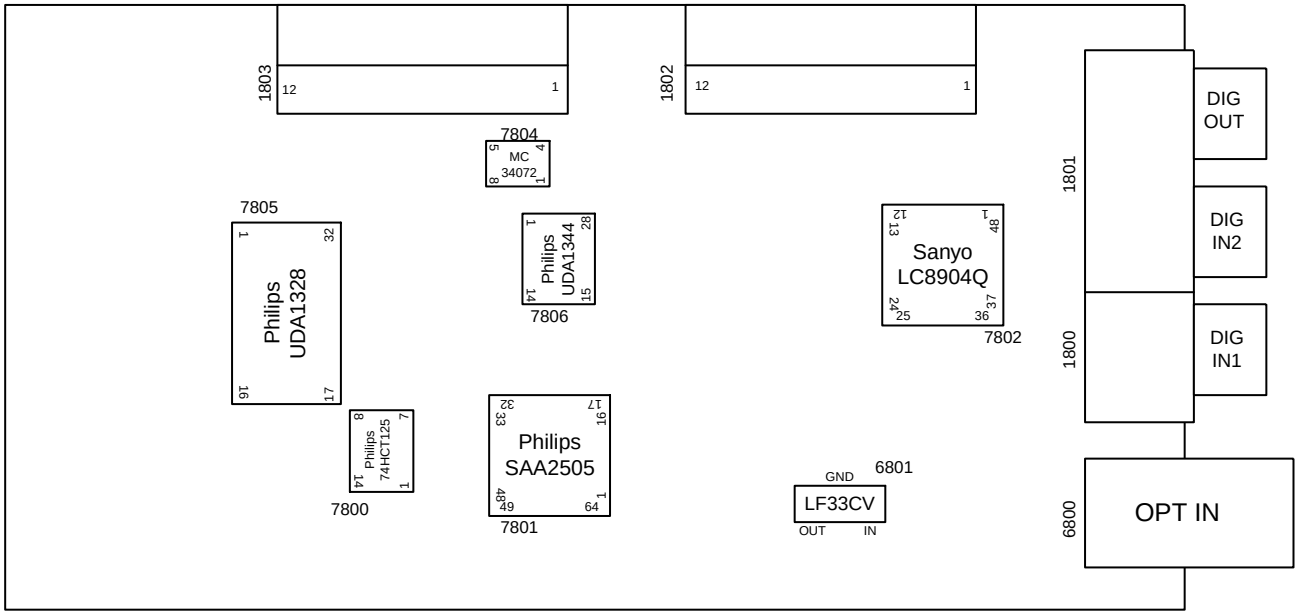

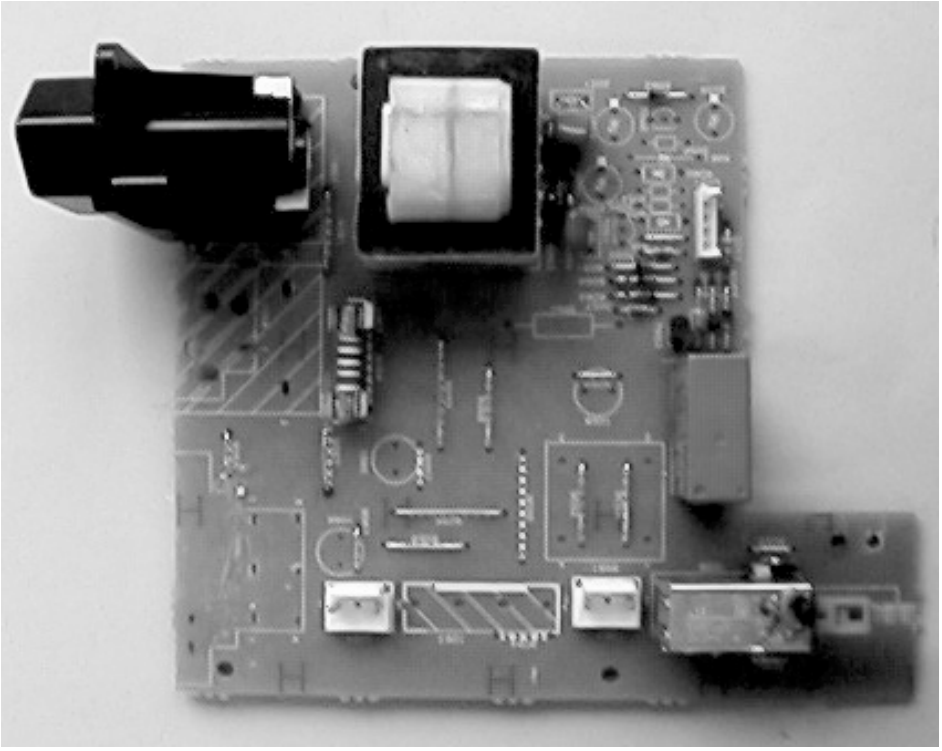

MAINS BOARD

TABLE OF CONTENTS

Circuit diagram 10-2
Component layout 10-3
Partslist 10-5

10-2

MAINS BOARD - CIRCUIT DIAGRAM

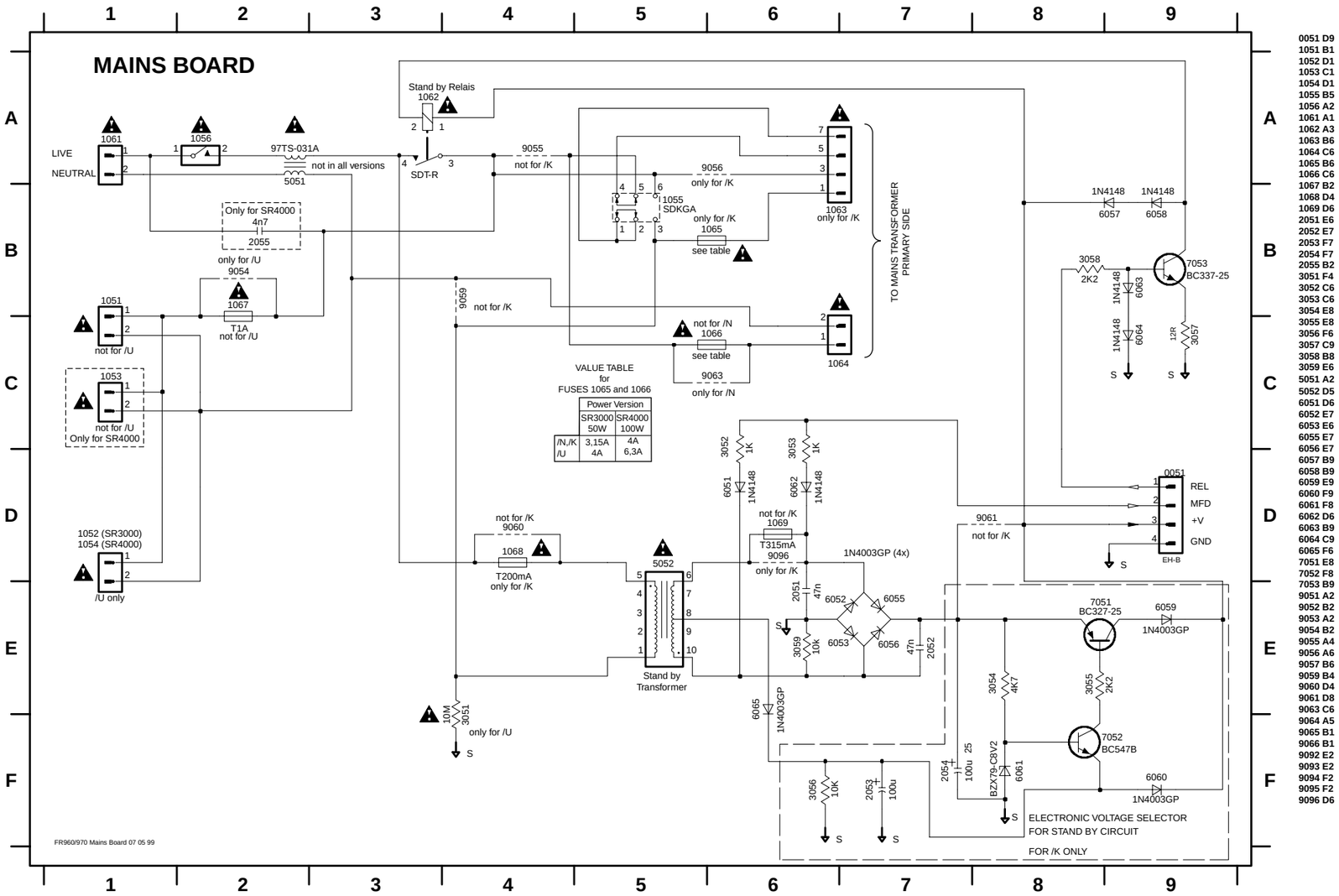

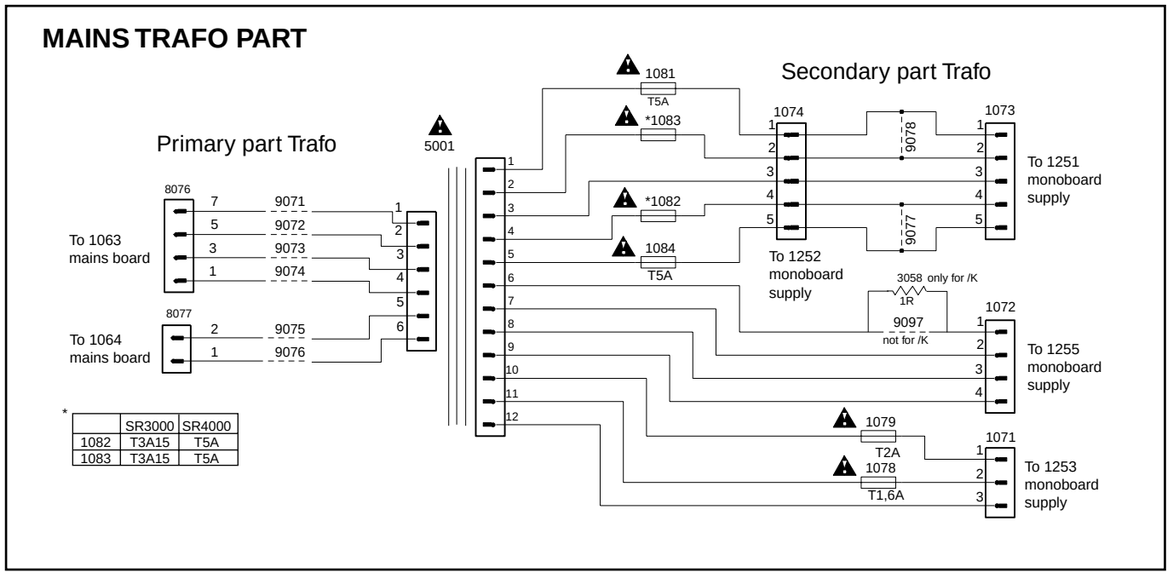

0051 D9
1051 B1
1052 D1
1053 C1
1054 D1
1055 B5
1056 A2
1061 A1
1062 A3
1063 B6
1064 C6
1065 B6
1066 C6
1067 B2
1068 D4
1069 D6
2051 E6
2052 E7
2053 F7
2054 F7
2055 B2
3051 F4
3052 C6
3053 C6
3054 E8
3055 E8
3056 F6
3057 C9
3058 B8
3059 E6
5051 A2
5052 D5
6051 D6
6052 E7
6053 E6
6055 E7
6056 E7
6057 B9
6058 B9
6059 E9
6060 F9
6061 F8
6062 D6
6063 B9
6064 C9
6065 F6
7051 E8
7052 F8
7053 B9
9051 A2
9052 B2
9053 A2
9054 B2
9055 A4
9056 A6
9057 B6
9059 B4
9060 D4
9061 D8
9063 C6
9064 A5
9065 B1
9066 B1
9092 E2
9093 E2
9094 F2
9095 F2
9096 D6

MAINS BOARD - COMPONENTSIDE VIEW & COPPERSIDE VIEW

Mainsboard Componentside view

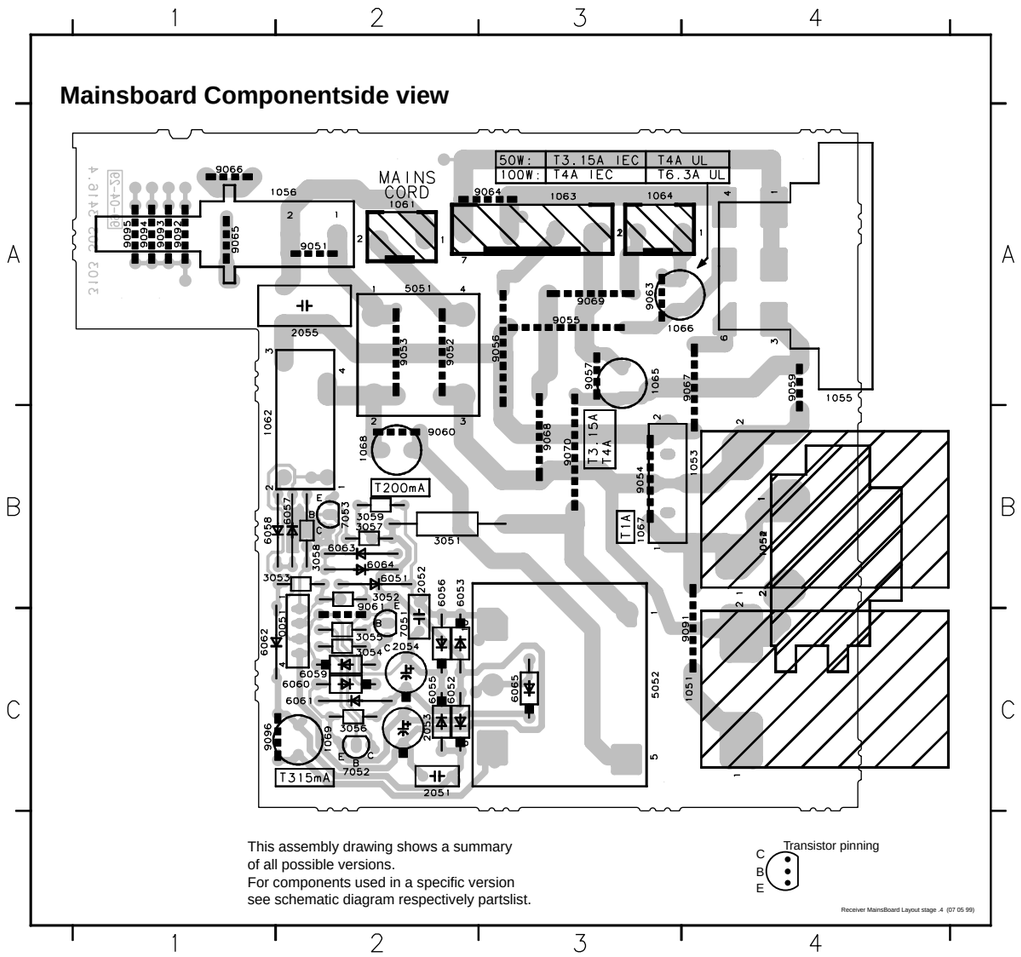

This assembly drawing shows a summary
of all possible versions.
For components used in a specific version
see schematic diagram respectively partslist.

Transistor pinning

C
B
E

Receiver MainsBoard Layout stage .4 (07 05 99)

0051 C2
1051 C4
1052 B4
1053 B4
1054 B4
1055 A4
1056 A2
1061 A2
1062 B2
1063 A3
1064 A3
1065 A3
1066 A3
1067 B3
1068 B2
1069 C2
2051 C2
2052 C2
2053 C2
2054 C2
2055 A2
3051 B2
3052 B2
3053 B2
3054 C2
3055 C2
3056 C2
3057 B2
3058 B2
3059 B2
5051 A2
5052 C3
6051 B2
6052 C2
6053 C2
6055 C2
6056 C2
6057 B2
6058 B2
6059 C2
6060 C2
6061 C2
6062 C2
6063 B2
6064 B2
6065 C3
7051 C2
7052 C2
7053 B2
9051 A2
9052 A2
9053 A2
9054 B3
9055 A3
9056 A3
9057 A3
9059 A4
9060 B2
9061 C2
9063 A3
9064 A3
9065 A1
9066 A1
9067 A4
9068 B3
9069 A3
9070 B3
9091 C4
9092 A1
9093 A1
9094 A1
9095 A1
9096 C1

10-3

Mainsboard Copperside view

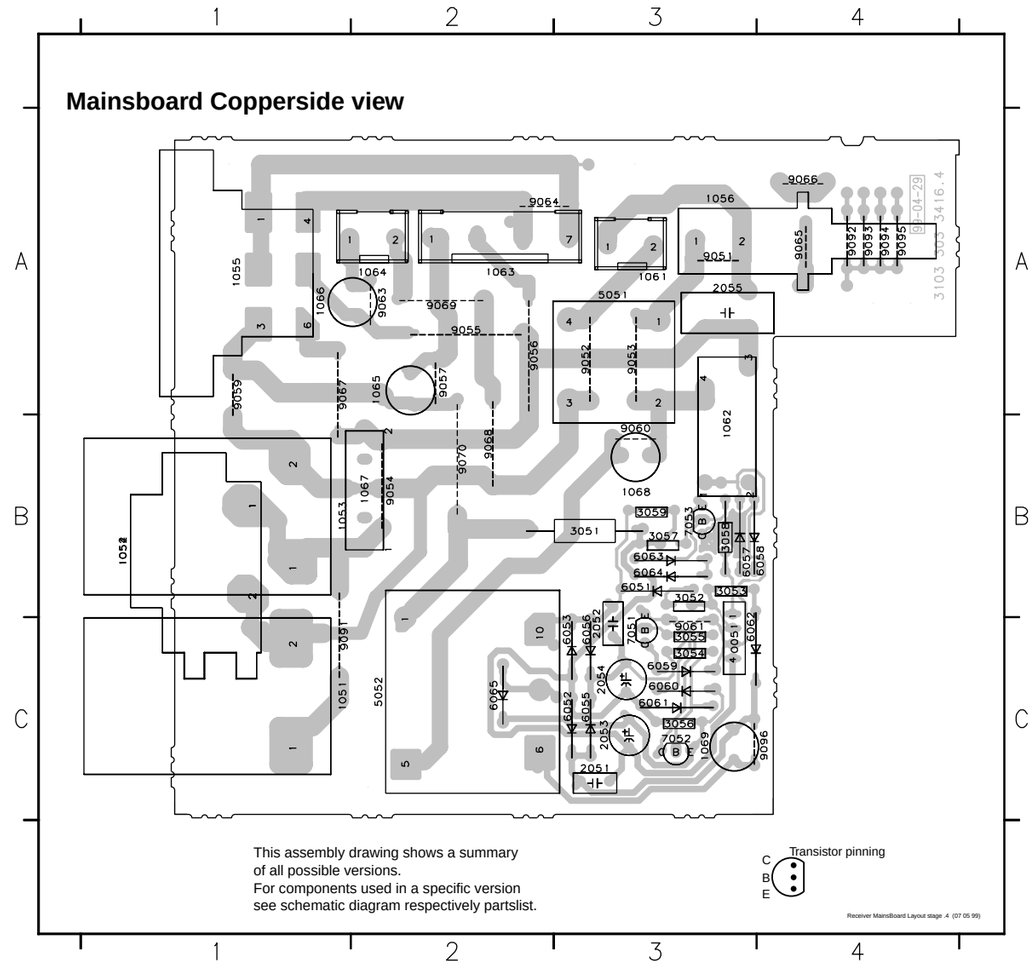

This assembly drawing shows a summary
of all possible versions.
For components used in a specific version
see schematic diagram respectively partslist.

Transistor pinning

C
B
E

Receiver MainsBoard Layout stage .4 (07 05 99)

0051 C3
1051 C1
1052 B1
1053 B1
1054 B1
1055 A1
1056 A3
1061 A3
1062 B3
1063 A2
1064 A2
1065 A2
1066 A2
1067 B2
1068 B3
1069 C3
2051 C3
2052 C3
2053 C3
2054 C3
2055 A3
3051 B3
3052 B3
3053 B3
3054 C3
3055 C3
3056 C3
3057 B3
3058 B3
3059 B3
5051 A3
5052 C2
6051 B3
6052 C3
6053 C3
6055 C3
6056 C3
6057 B3
6058 B3
6059 C3
6060 C3
6061 C3
6062 C3
6063 B3
6064 B3
6065 C2
7051 C3
7052 C3
7053 B3
9051 A3
9052 A3
9053 A3
9054 B2
9055 A2
9056 A2
9057 A2
9059 A1
9060 B3
9061 C3
9063 A2
9064 A2
9065 A4
9066 A4
9067 A1
9068 B2
9069 A2
9070 B2
9091 C1
9092 A4
9093 A4
9094 A4
9095 A4
9096 C4

TRAFO BOARD

Copperside view

Componentside view

Interconnection Board
Transformer secondary

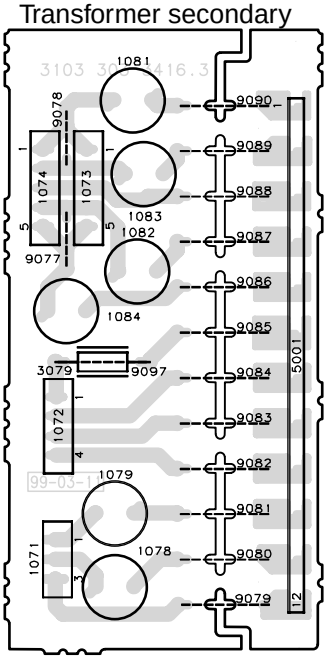

Interconnection Board
Transformer secondary

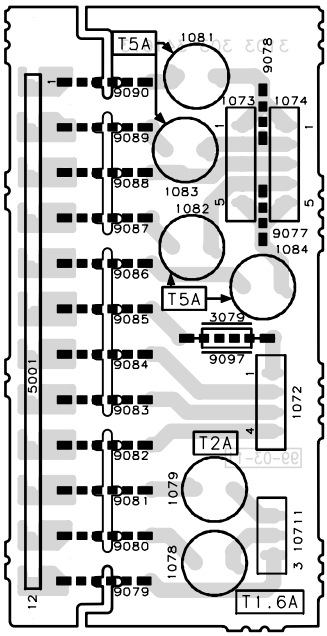

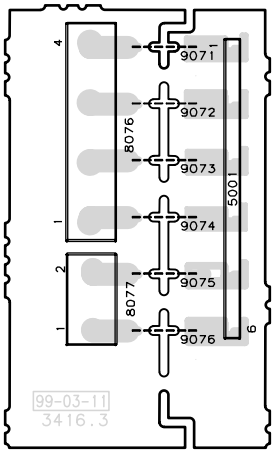

Interconnection Board
Transformer primary

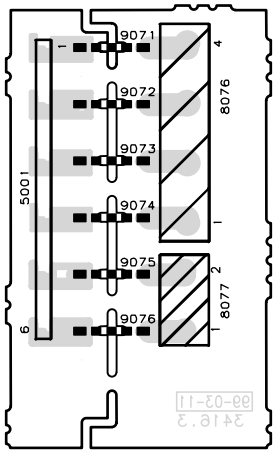

Interconnection Board
Transformer primary

ELECTRICAL PARTSLIST - MAINS BOARD

POS. NO	MODEL	VERS. COLOR	PART NO.	DESCRIPTION
				MISCELLANEOUS
▲ 1051		N, K	4822 267 31994	MAINS OUTLET
▲ 1052	3000	U	4822 265 11605	CCT1302-0202 MAINS LET
▲ 1053	4000	N, K	4822 267 31994	MAINS OUTLET
▲ 1054	4000	U	2422 030 00301	MAINS OUTLET
▲ 1055	4000	K	4822 272 10269	VOLTAGE SEL.
▲ 1056			4822 276 13224	MAINS SWITCH
▲ 1061			4822 265 20723	MAINS INLET
1062			4822 280 10391	RELAY
▲ 1063	4000	K	4822 267 10728	B4P7-VH
▲ 1064			4822 265 20723	B2P3-VH
▲ 1065	4000	K	4822 071 54002	19372 (4A)
▲ 1066	3000	U	4822 253 10126	19374 (4,0A)
▲ 1066	4000	U	4822 252 51123	19374A1 (6,3A)
▲ 1066	4000	K	4822 071 54002	19372 (4A)
▲ 1067		N	2422 086 10912	FUSE 5X20 ET 2,50A 250V IEC B
▲ 1067	4000	K	2422 086 10915	FUSE 5X20 ET 5,00A 250V IEC B
▲ 1068	4000	K	4822 071 52001	19372 (200MA)
▲ 1069		U, N	4822 071 53151	19372 (315MA)
▲ 1078			4822 071 51602	19372 (1.6A)
▲ 1079			4822 071 52002	19372 (2A)
▲ 1081 ∫ ▲ 1084			4822 071 55002	19372 (5A)
				CAPACITORS
2051 2052			4822 121 43526	47NF 5% 250V
2053 2054	4000	K	4822 124 40207	100UF 20% 25V
▲ 2055			4822 126 14084	4,7NF 20% 250V
				RESISTORS
▲ 3051		U	4822 053 21106	10M00 5% 0,5W
3052 3053			4822 050 11002	1K00 1% 0,4W
3054	4000	K	4822 116 52283	4K7 5% 0,5W
3055	4000	K	4822 116 52256	2K2 5% 0,5W
3056	4000	K	4822 050 21003	10K00 1% 0,6W
3057			4822 116 52179	12E 5% 0,5W
3058			4822 116 52256	2K2 5% 0,5W
▲ 3079	4000	K	4822 052 10108	1R00 5% 0,33W
				TRAFO
▲ 5052		U	4822 146 11142	STBY TRAFO for U
▲ 5052		N	4822 146 11143	STBY TRAFO for N
▲ 5052	4000	K	4822 146 11144	STBY TRAFO for K
				DIODES
6051			4822 130 30621	1N4148
6052 ∫ 6056			4822 130 31878	1N4003G
6057 6058			4822 130 30621	1N4148
6059 6060	4000	K	4822 130 31878	1N4003G
6061	4000	K	4822 130 34382	BZX79-B8V2
6062 ∫ 6064			4822 130 30621	1N4148
6065	4000	K	4822 130 31878	1N4003G
				TRANSISTORS
7051	4000	K	4822 130 41246	BC327-25
7052	4000	K	4822 130 40959	BC547B
7053			4822 130 40981	BC337-25

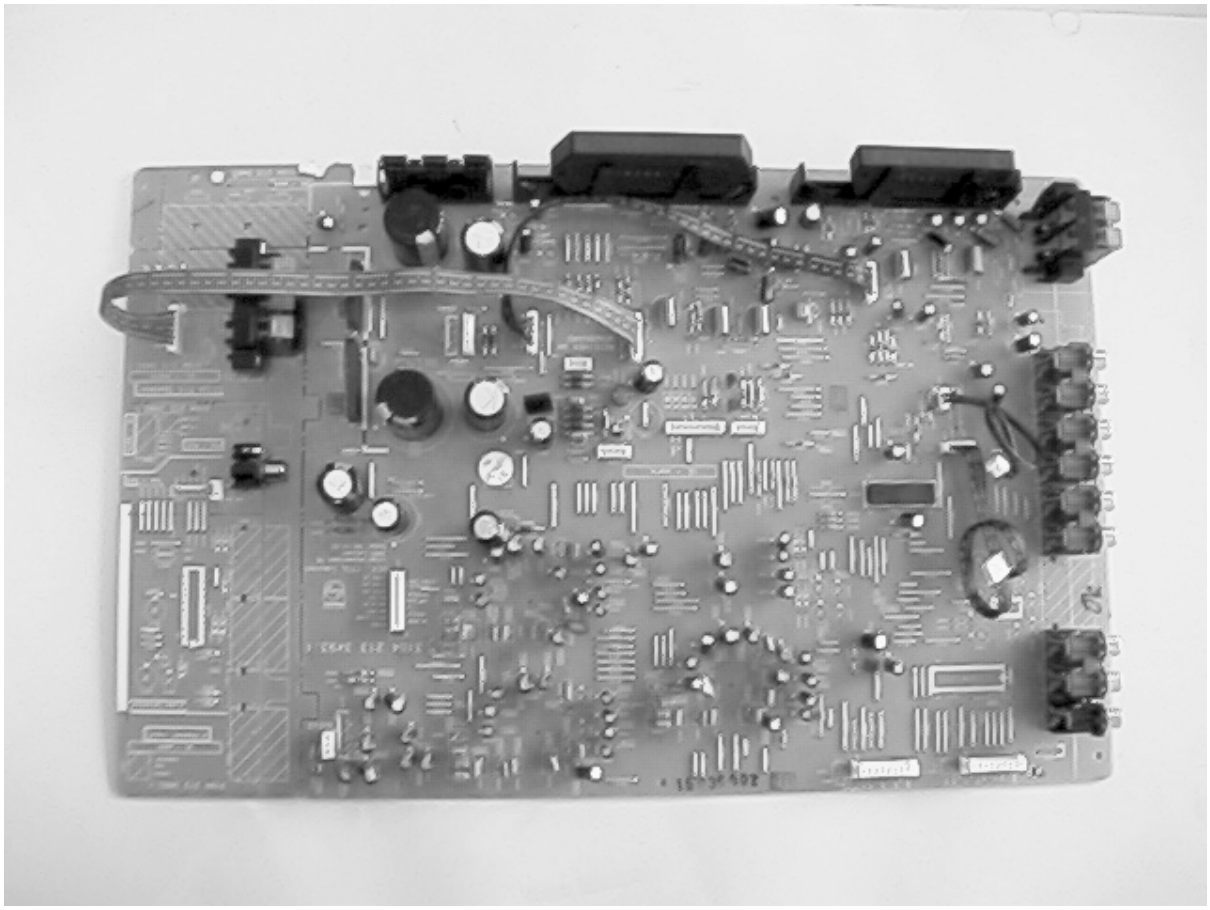

MONO BOARD

TABLE OF CONTENTS

Measurement hint 11-2
P50/Speaker/Video Selector layout 11-3
Circuit diagram Source selector 11-5
Circuit diagram Volume control..... 11-7
Circuit diagram Supply 11-9
Circuit diagram Amplifier SR3000 11-11
Circuit diagram Amplifier SR4000 11-12
Mapping Component side 11-13
Mapping Chip side 11-14
Component layout 11-15
Chips layout 11-16

MEASUREMENT REFERENCES TO LAYOUT ON PAGE 11-15 (for SR4000)

IC7643

IC 7643 Pin	Can be measure via Test point on component side monoboard	Funtionality
17	TP 47	MDM Surround L in
18	TP 48	not used
9	TP 50	MDM Surround R in
10	TP 51	not used
3	TP 52	4,7V
2	TP 53	4,7V
4	TP 54	4,7V
26	TP 55	4,7V
27	TP 56	4,7V
33	TP 57	Surround Right out
36/40/43	TP 58	Ground
41/42	TP 59	9,4V
39	TP 60	4,7V
19	TP 61	8,7V
34	TP 63	Surround Left out
25	TP 64	4,7V
24	TP 65	4,7V
12	TP 66	4,7V
20	TP 67	4,7V
21	TP 68	4,7V

IC7503

IC 7503 Pin	Can be measure via Test point on component side monoboard	Funtionality
5	TP 73	Right in
4	TP 74	-12V
8	TP 75	11V
3	TP 76	Left in

IC7504

IC 7504 Pin	Can be measure via Test point on component side monoboard	Funtionality
5	TP 77	Rec - in Right
4	TP 78	-13,5V
7	TP 79	Rec - out Right
8	TP 80	12V
3	TP 81	Rec - in Left
1	TP 82	Rec - out Left

MEASUREMENT REFERENCES TO LAYOUT ON PAGE 11-15 (for SR4000)

IC7641

IC 7641 Pin	Can be measure via Test point on component side monoboard	Funtionality
16	TP 1	Left in
17	TP 2	MDM Left in
18	TP 3	not used
8	TP 4	Right in
9	TP 5	MDM Right in
10	TP 6	not used
3	TP 7	4,7V
2	TP 8	4,7V
4	TP 9	4,7V
26	TP 10	4,7V
27	TP 11	4,7V
33	TP 12	Right out
36/40/43	TP 13	Ground
41/42	TP 14	9,4V
39	TP 15	4,7V
19	TP 16	8,7V
34	TP 18	Left out
25	TP 19	4,7V
24	TP 20	4,7V
12	TP 21	4,7V
20	TP 22	4,7V
21	TP 23	4,7V

IC7642

IC 7642 Pin	Can be measure via Test point on component side monoboard	Funtionality
16	TP 24	4,7V
17	TP 25	MDM Center in
18	TP 26	not used
8	TP 27	MDM Subwoofer in
9	TP 28	MDM Subwoofer in
10	TP 29	not used
3	TP 30	4,7V
2	TP 31	4,7V
4	TP 32	4,7V
26	TP 33	4,7V
27	TP 34	4,7V
33	TP 35	Subwoofer out
36/43	TP 36	Ground
40/41/42	TP 37	9,4V
39	TP 38	4,7V
19	TP 39	8,7V
34	TP 40	Center out
25	TP 41	4,7V
24	TP 42	4,7V
12	TP 43	4,7V
20	TP 44	4,7V
21	TP 45	4,7V

IC7601

IC 7601 Pin	Can be measure via Test point on component side monoboard	Funtionality
5	TP 69	Headphone Amp L in
4	TP 70	-13,5V
8	TP 71	12V
3	TP 72	Headphone Amp R in

Tr 7622

Tr7622	Can be measure via Test point on component side monoboard	Funtionality
B	TP 99	-0,5V
C	TP 100	Ground
E	TP 101	Headphone Amp R out

IC7502

IC 7503 Pin	Can be measure via Test point on component side monoboard	Funtionality
5	TP 73	Right in
4	TP 74	-12V
8	TP 75	11V
3	TP 76	Left in

Tr 7653

Tr7653	Can be measure via Test point on component side monoboard	Funtionality
B	TP 86	-1,8V
E	TP 88	Center mute

Tr 7621

Tr7621	Can be measure via Test point on component side monoboard	Funtionality
B	TP 96	-1,5V
C	TP 97	Ground
E	TP 98	Headphone Amp L out

Tr 7658

Tr7658	Can be measure via Test point on component side monoboard	Funtionality
B	TP 83	5V
C	TP 84	-13V
E	TP 85	5V

SCREW TERMINAL BOARD - COMPONENT VIEW & COPPER SIDE VIEW (for SR4000)

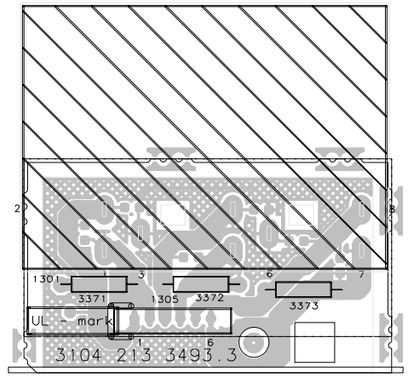

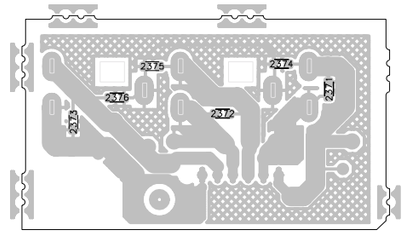

P50/RC5 / VIDEO SELECTOR BOARD - COMPONENT VIEW & COPPER SIDE VIEW

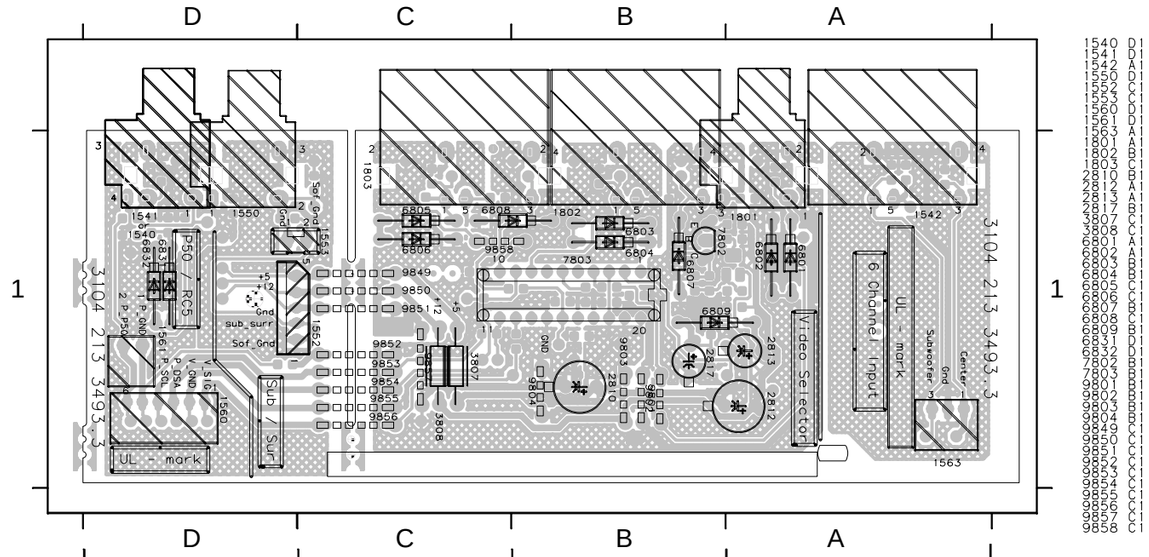

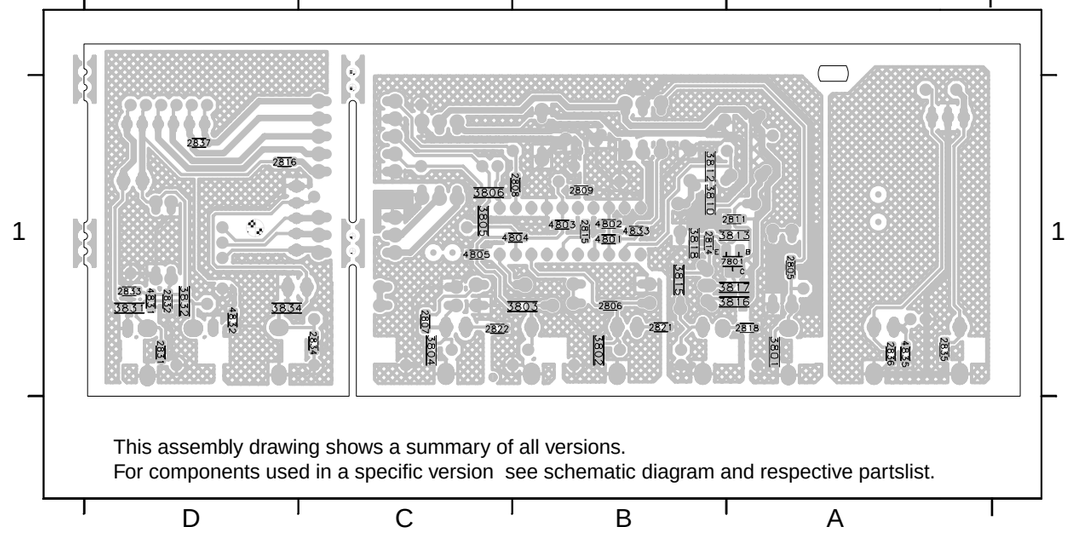

This assembly drawing shows a summary of all versions.
For components used in a specific version see schematic diagram and respective partslist.

MEASUREMENT REFERENCES TO LAYOUT ON PAGE 11-15 (for SR3000)

IC7641

IC 7641 Pin	Can be measure via Test point on component side monoboard	Funtionality
16	TP 1	Left in
17	TP 2	Dpl Left in
18	TP 3	not used
8	TP 4	Right in
9	TP 5	Dpl right in
10	TP 6	not used
3	TP 7	4,7V
2	TP 8	4,7V
4	TP 9	4,7V
26	TP 10	4,7V
27	TP 11	4,7V
33	TP 12	Right out
36/40/43	TP 13	Ground
41/42	TP 14	9,4V
39	TP 15	4,7V
19	TP 16	8,7V
34	TP 18	Left out
25	TP 19	4,7V
24	TP 20	4,7V
12	TP 21	4,7V
20	TP 22	4,7V
21	TP 23	4,7V

IC7642

IC 7642 Pin	Can be measure via Test point on component side monoboard	Funtionality
16	TP 24	not used
17	TP 25	Dpl Center in
18	TP 26	not used
8	TP 27	not used
9	TP 28	Subwoofer in
10	TP 29	not used
3	TP 30	4,7V
2	TP 31	4,7V
4	TP 32	4,7V
26	TP 33	4,7V
27	TP 34	4,7V
33	TP 35	Subwoofer L out
36/43	TP 36	Ground
40/41/42	TP 37	9,4V
39	TP 38	4,7V
19	TP 39	8,7V
34	TP 40	Center out
25	TP 41	4,7V
24	TP 42	4,7V
12	TP 43	4,7V
20	TP 44	4,7V
21	TP 45	4,7V

IC7601

IC 7601 Pin	Can be measure via Test point on component side monoboard	Funtionality
5	TP 69	Headphone Amp L in
4	TP 70	-13,5V
8	TP 71	12V
3	TP 72	Headphone Amp R in

Tr 7622

Tr7622	Can be measure via Test point on component side monoboard	Funtionality
B	TP 99	-0,5V
C	TP 100	Ground
E	TP 101	Headphone Amp R out

IC7502

IC 7503 Pin	Can be measure via Test point on component side monoboard	Funtionality
5	TP 73	Right in
4	TP 74	-12V
8	TP 75	11V
3	TP 76	Left in

Tr 7653

Tr7653	Can be measure via Test point on component side monoboard	Funtionality
B	TP 86	-1,8V
E	TP 88	0V

Tr 7621

Tr7621	Can be measure via Test point on component side monoboard	Funtionality
B	TP 96	-1,5V
C	TP 97	Ground
E	TP 98	Headphone Amp L out

Tr 7658

Tr7658	Can be measure via Test point on component side monoboard	Funtionality
B	TP 83	5V
C	TP 84	-13V
E	TP 85	5V

CLICK FIT SPEAKER BOARD - COMPONENT VIEW & COPPER SIDE VIEW (for SR3000)

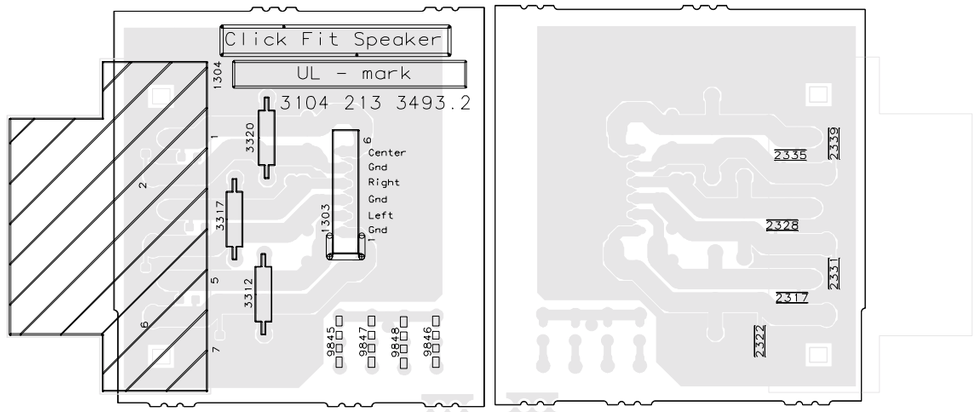

P50/RC5 BOARD - COMPONENT VIEW & COPPER SIDE VIEW

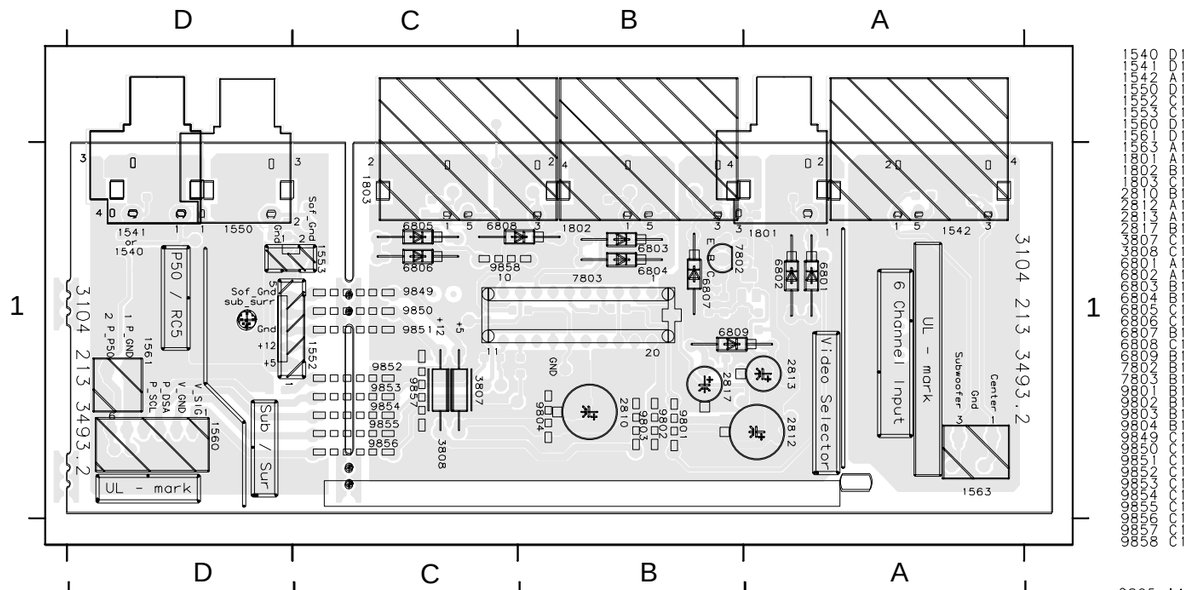

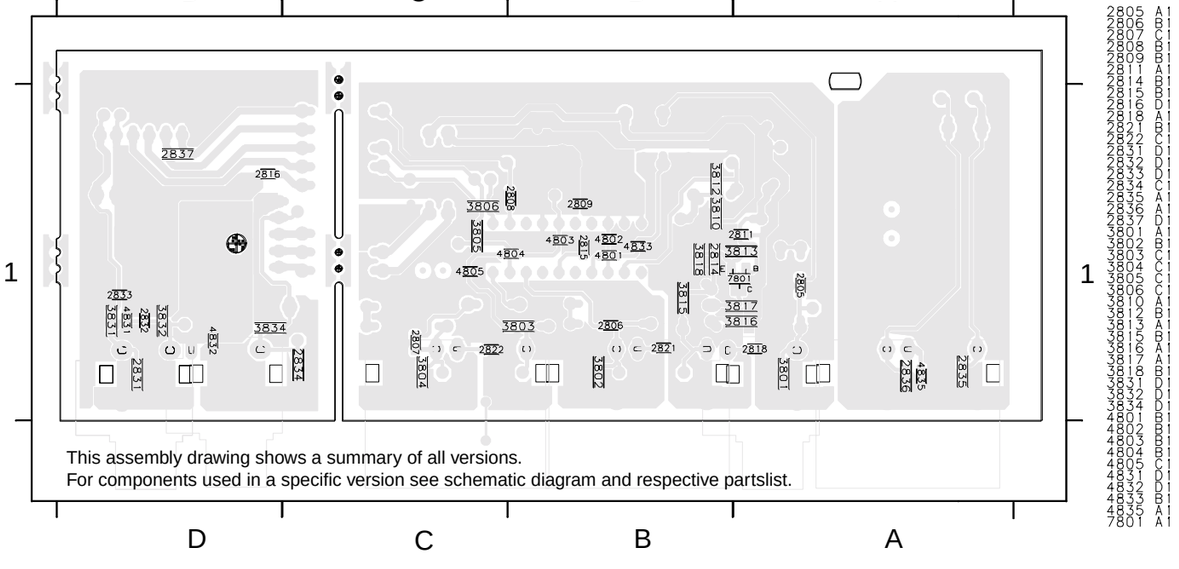

This assembly drawing shows a summary of all versions.
For components used in a specific version see schematic diagram and respective partslist.

11-5

SOURCE SELECTOR PART SR3000

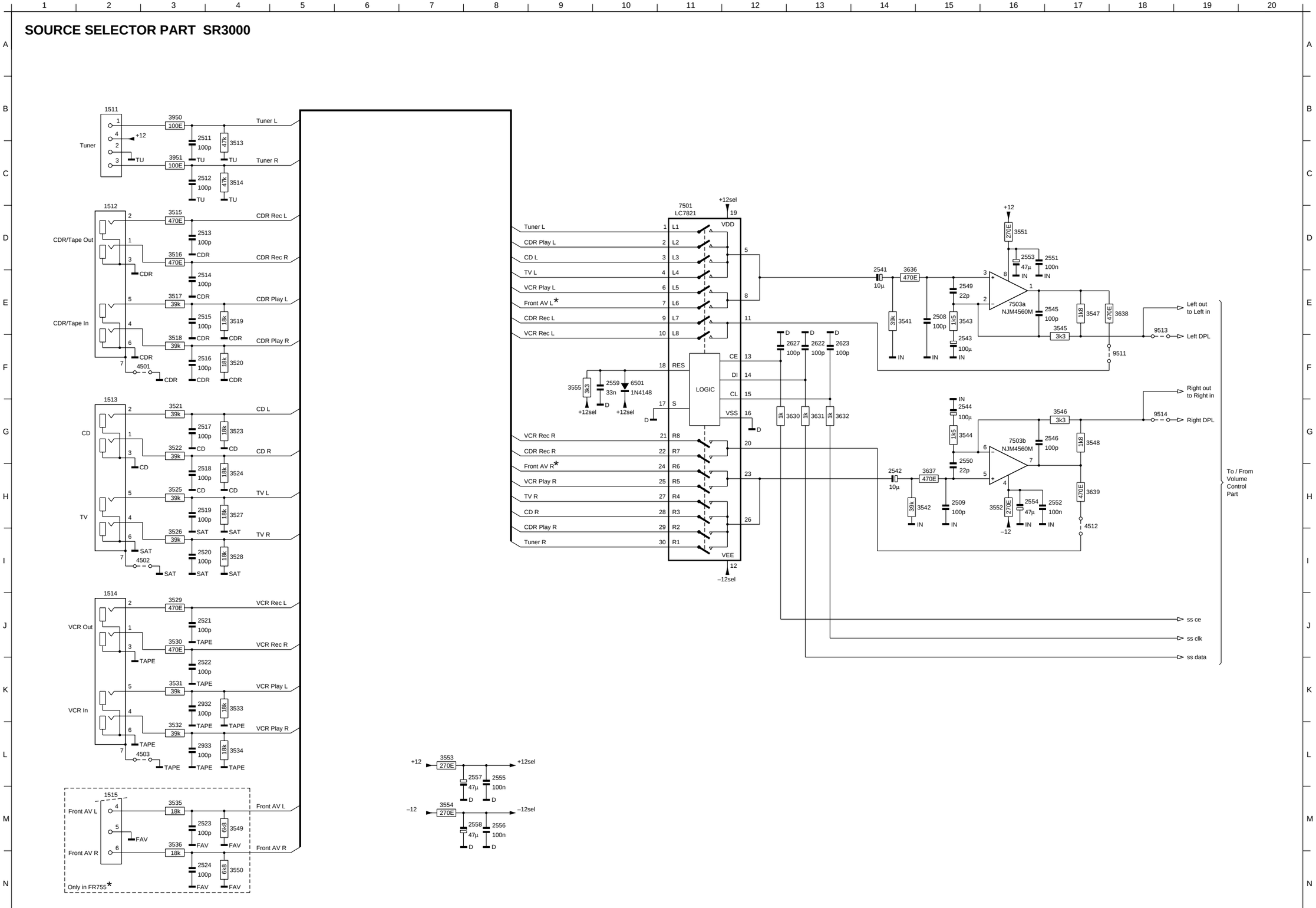

1511	B2
1512	D2
1513	G2
1514	J2
1515	M2
2508	E15
2509	H15
2511	B3
2512	C3
2513	D3
2514	E3
2515	E3
2516	F3
2517	G3
2518	H3
2519	H3
2520	I3
2521	J3
2522	K3
2523	M3
2524	N3
2541	E14
2542	H14
2543	F15
2544	G15
2545	E17
2546	G17
2549	E15
2550	G15
2551	D17
2552	H17
2553	D16
2554	H16
2555	L8
2556	M8
2557	L8
2558	M8
2559	F10
2622	F13
2623	F13
2627	F13
2932	K3
2933	L3
3513	C4
3514	C4
3515	D3
3516	D3
3517	E3
3518	F3
3519	E4
3520	F4
3521	G3
3522	G3
3523	G4
3524	H4
3525	H3
3526	I3
3527	H4
3528	I4
3529	J3
3530	J3
3531	K3
3532	L3
3533	K4
3534	L4
3535	M3
3536	M3
3541	E14
3542	H15
3543	E15
3544	G15
3545	E17
3546	G17
3547	E17
3548	G17
3549	M4
3550	N4
3551	D16
3552	H16
3553	L7
3554	M7
3555	F9
3630	G13
3631	G13
3632	G13
3636	E14
3637	H15
3638	E18
3639	H17
3950	B3
3951	C3
4501	F2
4502	I2
4503	L2
4512	H17
6501	F10
7501	D11
7503a	E16
7503b	G16
9511	F18
9513	E18
9514	G18

SOURCE SELECTOR PART FR735 - FR755
3104 217 05800 / 05940 / 05960

LEU0160
9926

11-6

SOURCE SELECTOR PART SR4000

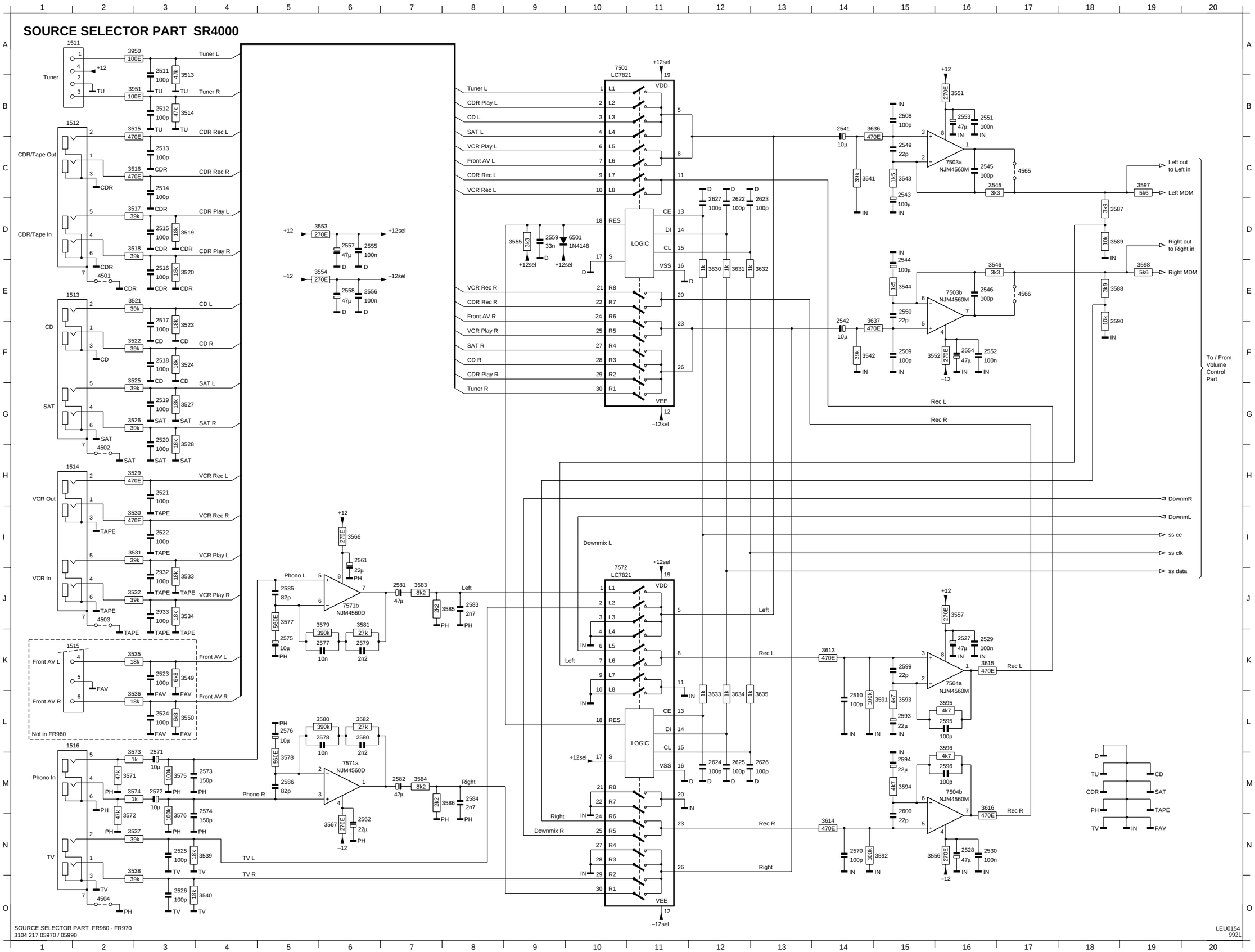

SOURCE SELECTOR PART FR960 - FR970
3104 217 05970 / 05990

LEU0154
9921

1511	A1	3557	J16
1512	B1	3566	I6
1513	E1	3567	N6
1514	H1	3571	M2
1515	K1	3572	N2
1516	L1	3573	M2
2508	B15	3574	M2
2509	F15	3575	M3
2510	L14	3576	N3
2511	A3	3577	J5
2512	B3	3578	M5
2513	C3	3579	J5
2514	C3	3580	L5
2515	D3	3581	J6
2516	E3	3582	L6
2517	F3	3583	J7
2518	F3	3584	M7
2519	G3	3585	J8
2520	G3	3586	M8
2521	H3	3587	D18
2522	I3	3588	E18
2523	K3	3589	D18
2524	L3	3590	F18
2525	N3	3591	L15
2526	O3	3592	N15
2527	K16	3593	L15
2528	N16	3594	M15
2529	K16	3595	L16
2530	N16	3596	L16
2541	B14	3597	C19
2542	F14	3598	E19
2543	C15	3613	K14
2544	E15	3614	N14
2545	C16	3615	K16
2546	E16	3616	M16
2549	C15	3630	E12
2550	E15	3631	E12
2551	B16	3632	E13
2552	F16	3633	L12
2553	B16	3634	L12
2554	F16	3635	L13
2555	D6	3636	B14
2556	E6	3637	F14
2557	D6	3950	A2
2558	E6	3951	B2
2559	D9	4501	E2
2561	I6	4502	H2
2562	N6	4503	J2
2570	N14	4504	O2
2571	M3	4565	C17
2572	M3	4566	E17
2573	M4	6501	D10
2574	M4	7501	A10
2575	K5	7503a	C16
2576	L5	7503b	E16
2577	K5	7504a	K16
2578	L5	7504b	M16
2579	K6	7571a	M6
2580	L6	7571b	J6
2581	J7	7572	J10
2582	M7		
2583	J8		
2584	M8		
2585	J5		
2586	M5		
2593	L15		
2594	M15		
2595	L16		
2596	M16		
2599	K15		
2600	M15		
2622	D12		
2623	D13		
2624	M12		
2625	M12		
2626	M13		
2627	D12		
2932	J3		
2933	J3		
3513	B3		
3514	B3		
3515	B2		
3516	C2		
3517	D2		
3518	D2		
3519	D3		
3520	E3		
3521	E2		
3522	F2		
3523	F3		
3524	F3		
3525	F2		
3526	G2		
3527	G3		
3528	H3		
3529	H2		
3530	I2		
3531	I2		
3532	J2		
3533	J3		
3534	J3		
3535	K2		
3536	L2		
3537	N2		
3538	N2		
3539	N4		
3540	O4		
3541	C14		
3542	F14		
3543	C15		
3544	E15		
3545	C16		
3546	E16		
3549	K3		
3550	L3		
3551	B16		
3552	F15		
3553	D5		
3554	E5		
3555	D9		
3556	N15		

VOLUME CONTROL PART SR3000

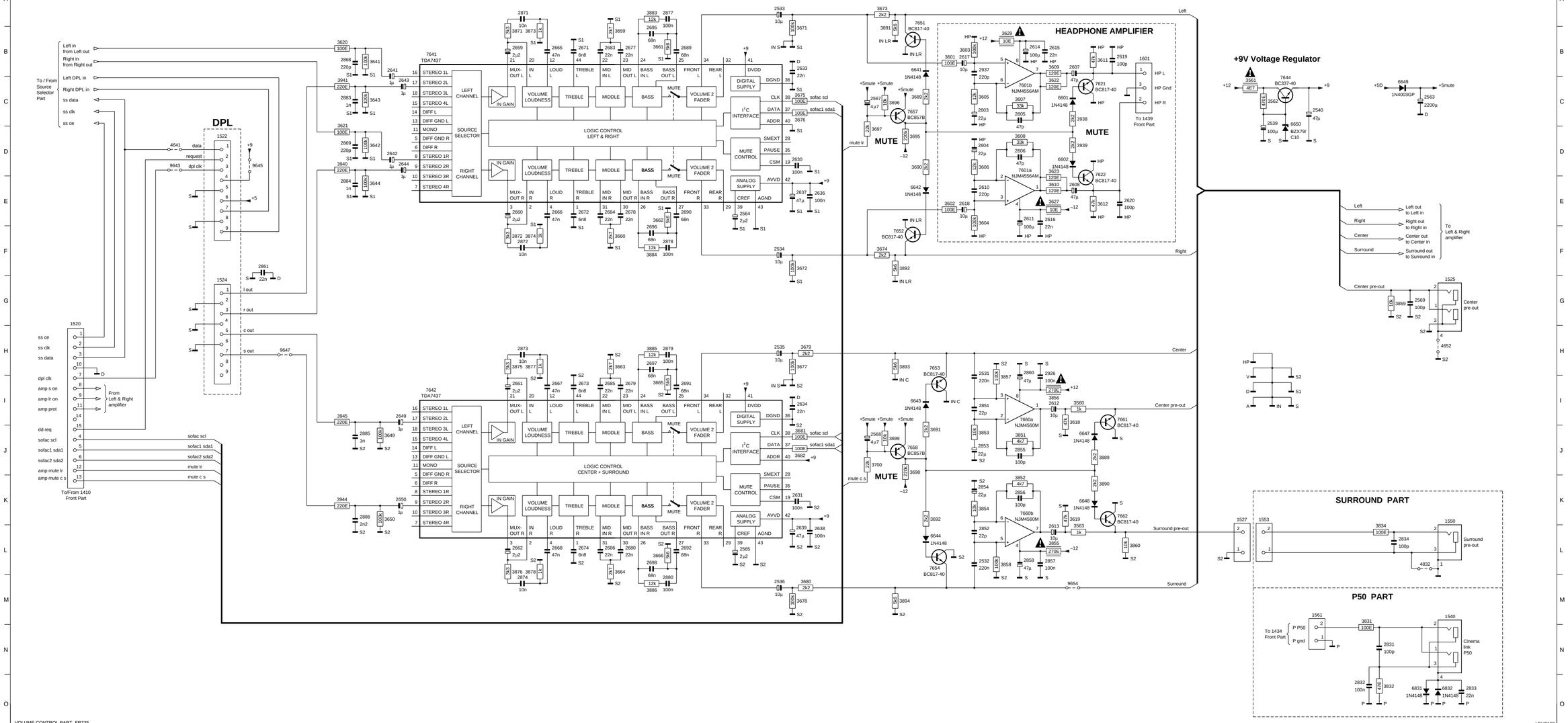

VOLUME CONTROL PART SR4000

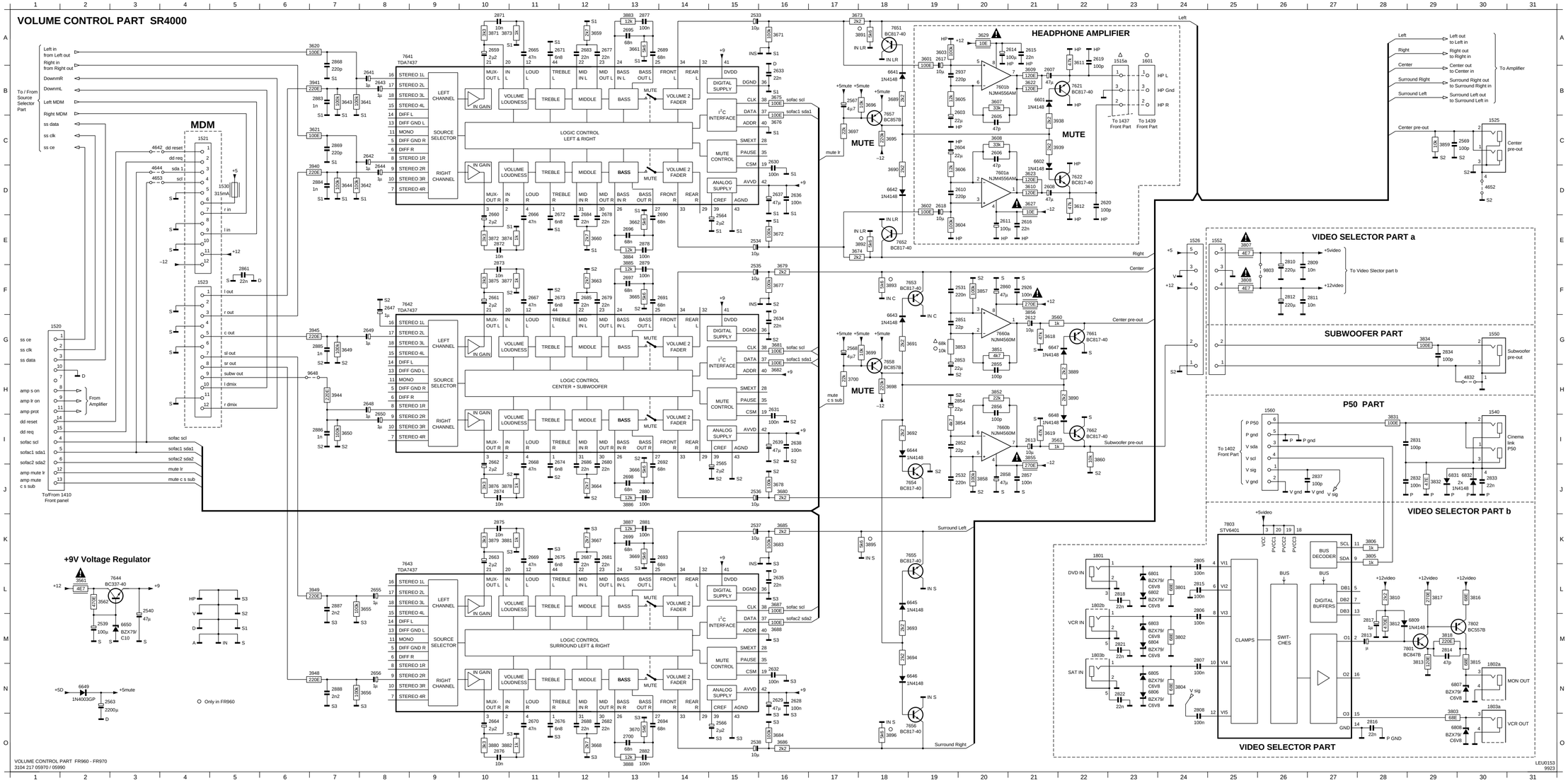

1515a	A23	2813	M28	3805	K28
1520	G1	2814	M29	3806	K28
1521	C4	2815	L24	3807	E25
1523	F4	2816	O28	3808	F25
1525	C30	2817	M28	3810	L28
1526	E24	2818	L23	3812	M28
1530	D5	2821	M23	3813	N29
1540	H30	2822	N23	3815	N30
1550	G30	2831	I29	3816	L30
1552	E25	2832	J29	3817	L29
1560	H26	2833	J30	3818	M29
1601	A23	2834	G29	3831	I28
1801	K22	2837	J27	3832	J29
1802a	N30	2851	G19	3834	G29
1802b	L22	2852	I19	3851	G20
1803a	N30	2853	G19	3852	H20
1803b	M22	2854	H19	3853	G19
2531	F19	2855	H20	3854	I19
2532	J19	2856	H20	3855	I21
2533	A15	2857	J21	3856	F21
2534	E15	2858	J20	3857	F20
2535	F15	2860	F20	3858	J20
2536	J15	2861	F5	3859	C29
2537	K15	2868	A7	3860	I22
2538	O15	2869	C7	3871	A10
2539	M2	2871	A10	3872	E10
2540	L3	2872	E10	3873	A10
2563	N2	2873	E10	3874	E10
2564	E15	2874	J10	3875	F10
2565	J15	2875	K10	3876	J10
2566	O15	2876	O10	3877	F10
2567	B17	2877	A13	3878	J10
2568	G17	2878	E13	3879	K10
2569	C30	2879	E13	3880	O10
2603	B19	2880	J13	3881	K10
2604	C19	2881	K13	3882	O10
2605	C20	2882	O13	3883	A13
2606	C20	2883	B7	3884	E13
2607	B21	2884	D7	3885	E13
2608	D21	2885	G7	3886	J13
2610	D19	2886	I7	3887	K13
2611	E20	2887	L7	3888	O13
2612	G21	2888	N7	3889	H22
2613	I21	2926	F21	3890	H22
2614	A20	2937	B19	3891	A17
2615	A21	3560	G21	3892	E17
2616	E21	3561	L2	3893	F18
2617	A19	3562	L2	3895	K18
2618	D19	3563	I21	3896	O18
2619	A22	3601	A19	3938	C21
2620	D22	3602	D19	3939	C21
2628	N16	3603	A19	3940	D6
2629	N16	3604	E19	3941	B6
2630	C16	3605	B19	3944	H7
2631	H16	3606	D19	3945	G6
2632	N16	3607	B20	3948	N6
2633	B16	3608	C20	3949	L6
2634	G16	3609	B21	4642	C3
2635	L16	3610	D21	4644	D3
2636	D16	3611	A22	4652	D30
2637	D16	3612	D22	4653	D3
2638	I16	3618	G21	4832	H30
2639	I16	3619	I21	6601	B21
2641	B8	3620	A6	6602	C21
2642	C8	3621	C6	6641	B18
2643	B8	3622	B21	6642	D18
2644	D8	3623	D21	6643	G18
2647	F8	3627	D21	6644	I18
2648	H8	3629	A20	6645	L18
2649	G8	3641	B8	6646	N18
2650	I8	3642	D8	6647	G21
2655	L8	3643	B7	6648	I21
2656	N8	3644	D7	6649	N2
2659	A10	3649	G7	6650	M3
2660	E10	3650	I7	6801	L23
2661	F10	3655	L8	6802	L23
2662	I10	3656	N8	6803	M23
2663	K10	3659	A12	6804	M23
2664	O10	3660	E12	6805	N23
2665	A11	3661	A13	6806	N23
2666	E11	3662	E13	6807	N29
2667	F11	3663	F12	6808	O29
2668	I11	3664	J12	6809	M29
2669	K11	3665	F13	6831	J29
2670	O11	3666	J13	6832	J30
2671	A11	3667	K12	7601a	D20
2672	E11	3668	O12	7601b	B20
2673	F11	3669	K13	7621	B22
2674	I11	3670	O13	7622	D22
2675	K11	3671	A16	7641	A8
2676	O11	3672	E16	7642	F8
2677	A12	3673	A17	7643	L8
2678	E12	3674	E17	7644	L3
2679	F12	3675	B16	7651	A18
2680	I12	3676	C16	7652	E18
2681	K12	3677	F16	7653	F18
2682	O12	3678	J16	7654	J18
2683	A12	3679	F16	7655	K18
2684	E12	3680	J16	7656	O18
2685	F12	3681	G16	7657	C18
2686	I12	3682	H16	7658	G18
2687	K12	3683	K16	7660a	C20
2688	O12	3684	O16	7660b	I20
2689	A13	3685	K16	7661	G22
2690	E13	3686	O16	7662	I22
2691	F13	3687	L16	7801	M28
2692	I13	3688	M16	7802	M30
2693	K13	3689	B18	7803	K25
2694	O13	3690	D18	9648	H6
2695	A13	3691	G18	9803	F26
2696	E13	3692	I18		
2697	F13	3693	M18		
2698	J13	3694	M18		
2699	K13	3695	C18		
2700	O13	3696	B18		
2805	K24	3697	C17		
2806	L24	3698	H18		
2807	M24	3699	G18		
2808	N24	3700	H17		
2809	E27	3801	L24		
2810	E26	3802	M24		
2811	F27	3803	N29		
2812	F26	3804	N24		

1251	A1	1258	E3	2260	C8	2271	I6	2277	L6	2287	K4	3257	L3	3270	F7	3294	H6	6259	I4	6265	J6	6276	E6	7258	E6	9260	E4
1253	I1	1265	G9	2266	I3	2273	K5	2278	M3	2290	H5	3258	M3	3271	F7	3295	I7	6260	H6	6267	L6	6280	F6	7908	H6		
1254	L1	2251	B3	2268	J4	2274	K6	2281	H5	2295	H6	3266	F7	3291	G4	6251	B4	6261	J3	6268	K2	6281	F6	7910	G6		
1255	F1	2254	C4	2269	J5	2275	K4	2282	H7	3254	J5	3268	E5	3292	H7	6257	I3	6262	J3	6274	D3	7253	M3	9251	B3		
1257	L9	2259	D8	2270	I5	2276	L5	2283	F4	3256	M4	3269	E5	3293	H6	6258	I3	6263	J4	6275	D2	7257	E5	9252	C3		

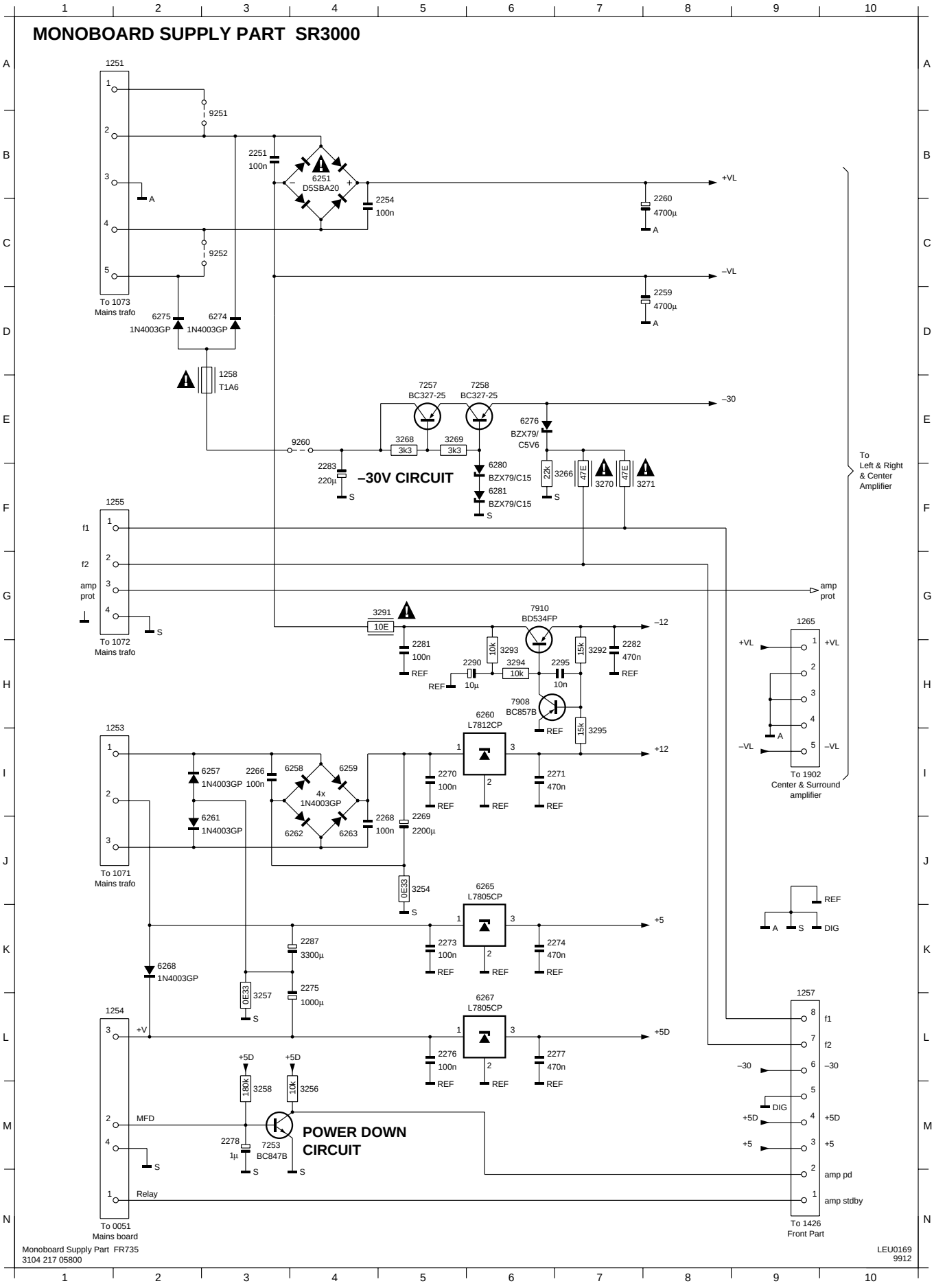

1251	A1	1258	E4	2259	D8	2269	J5	2275	K4	2283	F4	3258	M3	3271	F7	4253	D4	6259	I4	6267	L6	6281	F6	9251	B2
1252	A1	1265	G9	2260	B8	2270	I5	2276	L5	2290	H5	3265	E4	3291	G4	6251	B3	6260	H6	6268	K2	7253	M3	9252	C2
1253	I1	2251	B3	2262	C8	2271	I6	2277	L6	2295	H6	3266	F7	3292	H7	6252	B5	6261	J3	6274	D2	7257	E5	9260	E4
1254	L1	2253	B5	2264	C8	2272	K4	2278	M3	3254	J5	3268	E5	3293	H6	6253	B6	6262	J3	6275	D2	7258	E6		
1255	F1	2254	C4	2266	I3	2273	K5	2281	H5	3256	M4	3269	E5	3294	H6	6257	I3	6263	J4	6276	E6	7908	H6		
1257	L9	2256	C7	2268	J4	2274	K6	2282	H7	3257	L3	3270	F7	3295	I7	6258	I3	6265	J6	6280	F6	7910	G6		

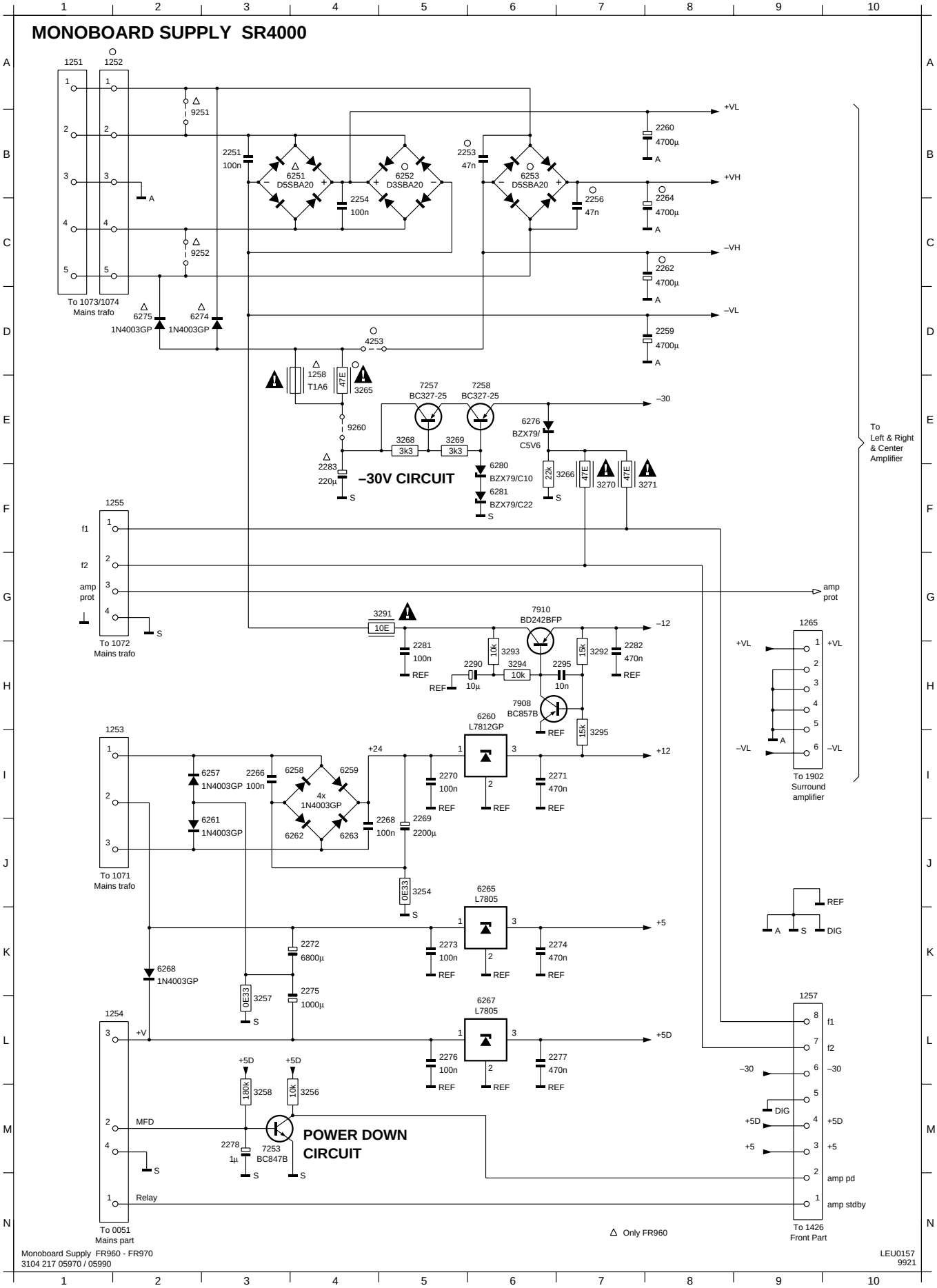

11-11

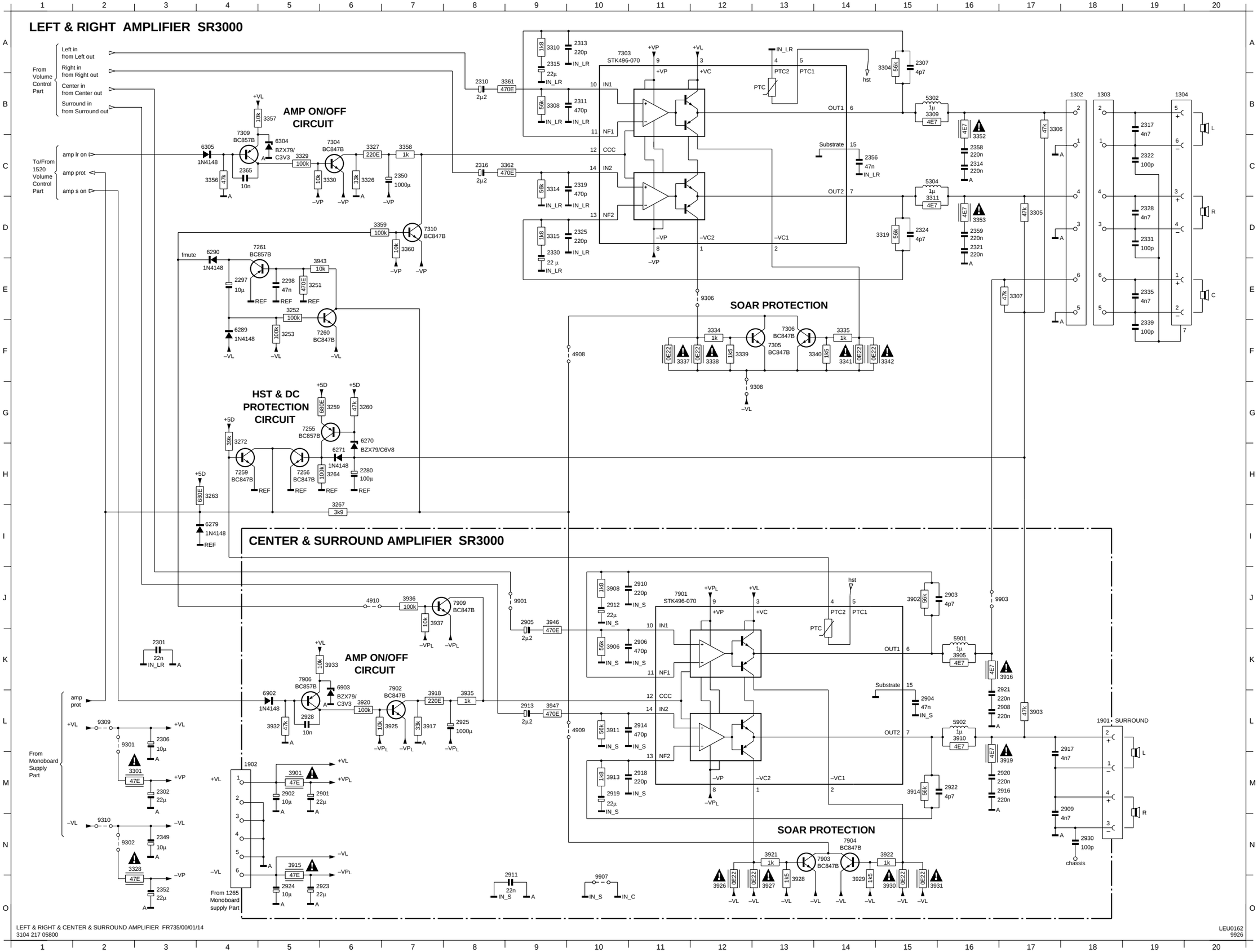

1302	B18	3922	N15
1303	B18	3925	L7
1304	B19	3926	O12
1901	L18	3927	O13
1902	M4	3928	O13
2280	H6	3929	O14
2297	E4	3930	O15
2298	E5	3931	O15
2301	K3	3932	L5
2302	M3	3933	K6
2306	L3	3935	L8
2307	A15	3936	J7
2310	B8	3937	J7
2311	B10	3943	E5
2313	A10	3946	J9
2314	C16	3947	L9
2315	A9	4908	F10
2316	C8	4909	L10
2317	B19	4910	J6
2319	C10	5302	B15
2321	D16	5304	C15
2322	C19	5901	K16
2324	D15	5902	L16
2325	D10	6270	G6
2328	D19	6271	H6
2330	D9	6279	H4
2331	D19	6289	F4
2335	E19	6290	D4
2339	F19	6304	C5
2349	N3	6305	C4
2350	C7	6902	L5
2352	O3	6903	K6
2356	C14	7255	G5
2358	C16	7256	H5
2359	D16	7259	H4
2365	C4	7260	F5
2901	M5	7261	D4
2902	M5	7303	A10
2903	J16	7304	C6
2904	L15	7305	F13
2905	J9	7306	F13
2906	K11	7309	C4
2908	L16	7310	D7
2909	M18	7901	J11
2910	J11	7902	L7
2911	O8	7903	N14
2912	J10	7904	N14
2913	L9	7906	K5
2914	L11	7909	J8
2916	M16	9301	L2
2917	L18	9302	N2
2918	M11	9306	E12
2919	M10	9308	G12
2920	M16	9309	L2
2921	L16	9310	N2
2922	M16	9901	J9
2923	O5	9903	J16
2924	O5	9907	O10
2925	L8		
2928	L5		
2930	N18		
3251	E5		
3252	E5		
3253	F5		
3259	G6		
3260	G6		
3263	H4		
3264	H6		
3267	I6		
3272	H4		
3301	M2		
3304	A15		
3305	D17		
3306	B17		
3307	E17		
3308	B9		
3309	B15		
3310	A9		
3311	D15		
3314	C9		
3315	D9		
3319	D15		
3326	C6		
3327	C6		
3328	N2		
3329	C5		
3330	C6		
3334	F12		
3335	F14		
3337	F11		
3338	F12		
3339	F12		
3340	F13		
3341	F14		
3342	F15		
3352	C16		
3353	D16		
3356	C4		
3357	B5		
3358	C7		
3359	D6		
3360	D7		
3361	B8		
3362	C8		
3901	M5		
3902	J15		
3903	L17		
3905	K16		
3906	K10		
3908	J10		
3910	L16		
3911	L10		
3913	M10		
3914	M15		
3915	N5		
3916	K17		
3917	L7		
3918	L7		
3919	M17		
3920	L6		
3921	N13		

11-12

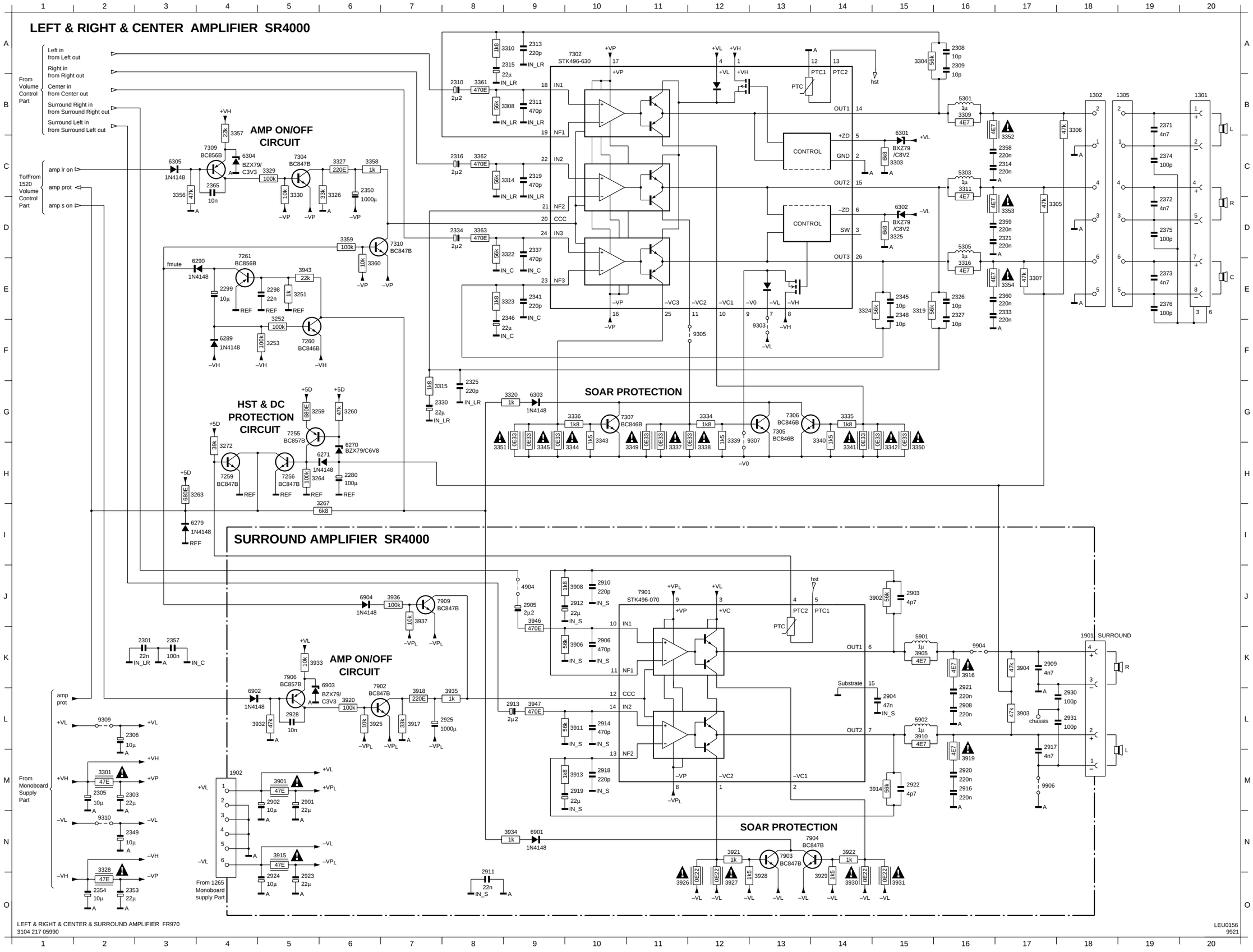

1301	B20	3351	H8
1302	B18	3352	C17
1305	B18	3353	D17
1901	K18	3354	E17
1902	M4	3356	D3
2280	H6	3357	C4
2298	E5	3358	C6
2299	E4	3359	D6
2301	K3	3360	E6
2303	M2	3361	B8
2305	M2	3362	C8
2306	L2	3363	D8
2308	A16	3901	M5
2309	A16	3902	J14
2310	B8	3903	L17
2311	B9	3904	K17
2313	A9	3905	K15
2314	C17	3906	K10
2315	A8	3908	J10
2316	C8	3910	L15
2319	C9	3911	L10
2321	D17	3913	M10
2325	G8	3914	M14
2326	E16	3915	N5
2327	E16	3916	K16
2330	G7	3917	L7
2333	E17	3918	L7
2334	D8	3919	M16
2337	D9	3920	L6
2341	E9	3921	N12
2345	E15	3922	N14
2346	F8	3925	L6
2348	E15	3926	O11
2349	N2	3927	O12
2350	C6	3928	O13
2353	O2	3929	O14
2354	O2	3930	O14
2357	K3	3931	O15
2358	C17	3932	L4
2359	D17	3933	K5
2360	E17	3934	N9
2365	C4	3935	L8
2371	B19	3936	J7
2372	D19	3937	J7
2373	E19	3943	E5
2374	C19	3946	J9
2375	D19	3947	L9
2376	E19	4904	J9
2901	M5	5301	B16
2902	M5	5303	C16
2903	J15	5305	D16
2904	L15	5901	K15
2905	J9	5902	L15
2906	K10	6270	H6
2908	L16	6271	H5
2909	K17	6279	I3
2910	J10	6289	F4
2911	O8	6290	E3
2912	J10	6301	B15
2913	L9	6302	D15
2914	L10	6303	G9
2916	M16	6304	C4
2917	L17	6305	C3
2918	M10	6901	N9
2919	M10	6902	L4
2920	M16	6903	K6
2921	L16	6904	J6
2922	M15	7255	G5
2923	O5	7256	H5
2924	O5	7259	H4
2925	L7	7260	F5
2928	L5	7261	E4
2930	L18	7302	A10
2931	L18	7304	C5
3251	E5	7305	G13
3252	F5	7306	G13
3253	F5	7307	G10
3259	G5	7309	C4
3260	G6	7310	D7
3263	H3	7901	J11
3264	H5	7902	L6
3267	I5	7903	N13
3272	H4	7904	N13
3301	M2	7906	K5
3303	C15	7909	J7
3304	A15	9303	F13
3305	D17	9305	F12
3306	B18	9307	H12
3307	E17	9309	L2
3308	B8	9310	N2
3309	B16	9904	K16
3310	A8	9906	M17
3311	C16		
3314	C8		
3315	G7		
3316	E16		
3319	E15		
3320	G9		
3322	D8		
3323	E8		
3324	E14		
3325	D15		
3326	D6		
3327	C6		
3328	N2		
3329	C5		
3330	D5		
3334	G12		
3335	G14		
3336	G10		
3337	H11		
3338	H12		
3339	H12		
3340	H14		
3341	H14		
3342	H15		
3343	H10		
3344	H10		
3345	H9		
3349	H10		
3350	H15		

MONO BOARD - MAPPING COMPONENT SIDE VIEW

1251 E7	2330 G4	2647 B4	3316 F4	6260 G8	9268 E4	9538 D1	9625 C7
1252 E8	2334 G4	2648 B4	3325 G7	6261 E6	9269 E7	9539 D1	9626 D4
1253 E6	2346 G5	2649 A4	3328 F5	6262 E6	9271 F7	9540 D1	9627 D4
1254 D6	2349 F7	2650 B4	3337 F6	6263 D6	9272 F8	9541 D2	9628 D5
1255 D4	2350 G4	2651 A4	3338 F6	6265 G7	9273 F8	9542 C2	9629 E2
1257 D5	2352 F5	2652 B3	3341 F6	6267 E7	9274 E8	9543 D2	9630 D4
1258 E6	2353 F5	2653 A6	3342 F6	6268 D6	9275 F8	9544 D1	9631 D4
1265 E7	2354 F6	2654 A6	3344 F6	6270 F3	9276 D8	9545 D1	9632 D4
1270 A2	2356 G5	2655 A6	3345 F6	6271 E3	9278 D8	9546 D2	9633 A2
1271 E5	2357 G5	2656 A6	3349 F6	6274 E7	9279 E8	9547 E3	9643 A6
1272 E6	2365 F3	2657 A6	3350 F6	6275 E7	9281 D3	9548 D3	9645 A1
1302 E5	2527 B3	2658 A6	3351 F5	6276 E4	9301 G6	9549 D3	9647 A3
1501 A1	2528 C4	2659 B6	3352 E5	6279 E2	9302 F7	9550 A3	9648 A3
1502 B1	2531 F1	2660 C7	3353 E5	6280 E5	9303 G7	9551 A3	9651 A7
1503 A1	2532 D2	2661 A4	3354 E4	6281 E5	9304 G6	9552 A3	9654 D2
1511 D2	2533 C7	2662 B4	3357 F3	6285 E5	9305 G6	9553 A3	9655 C8
1512 E1	2534 C7	2663 A6	3505 A4	6286 E5	9306 G6	9555 B3	9656 C7
1513 D1	2535 B5	2664 B7	3506 A3	6287 E5	9307 G6	9556 B3	9657 B8
1514 C1	2536 B5	2665 B6	3535 D3	6288 E5	9308 F7	9557 B3	9901 F2
1515 A8	2537 A7	2666 C6	3536 D3	6289 E3	9309 G7	9558 C3	9903 E4
1516 C1	2538 A7	2667 A4	3561 B3	6290 E3	9310 F7	9559 C3	9904 F2
1520 C8	2539 B3	2668 B4	3566 C2	6301 G7	9311 F5	9560 C3	9905 F1
1521 A2	2540 B3	2669 A6	3567 B2	6302 G7	9312 F5	9561 C3	9906 G1
1522 A1	2541 C4	2670 B6	3583 C2	6303 E3	9313 F5	9562 C3	9907 D5
1523 A3	2542 C4	2689 B7	3584 B2	6304 F3	9314 F5	9563 C3	9910 F2
1524 A2	2543 C4	2690 B8	3588 A2	6305 F3	9315 F5	9564 C4	9911 F2
1525 F1	2544 C4	2691 A5	3597 A2	6501 C3	9316 G5	9566 A4	9912 F2
1526 E2	2553 C5	2692 A5	3598 A2	6601 A8	9318 G5	9567 A4	9913 F3
1527 E2	2554 C5	2693 A7	3620 C6	6602 B8	9319 G5	9568 A4	9914 F3
1530 D5	2557 C2	2694 A8	3627 B8	6641 E4	9320 G6	9569 A5	9916 F2
1601 A8	2558 D2	2695 B7	3629 A8	6642 E4	9321 G6	9570 A5	9917 F4
1901 G1	2561 C1	2696 B8	3630 C3	6643 D4	9322 G6	9571 A5	9920 F2
1902 F3	2562 B2	2697 A5	3631 C3	6644 D2	9323 G7	9573 B5	9921 D8
2251 F8	2563 C7	2698 A5	3632 C3	6645 F2	9324 E6	9574 B6	
2252 E8	2564 C7	2699 A7	3691 D4	6646 F2	9325 E7	9577 B6	
2253 E8	2565 B5	2700 A8	3694 E2	6647 D2	9326 E6	9578 B6	
2254 F8	2566 A7	2853 F1	3697 B6	6648 D2	9501 A1	9579 B6	
2255 E8	2567 C6	2854 E1	3855 E1	6649 D7	9502 A2	9580 B6	
2256 E8	2568 C6	2858 E1	3901 G2	6650 B3	9503 A2	9581 B6	
2258 E7	2571 B1	2860 E1	3904 F1	6901 G3	9504 A2	9583 C5	
2259 E7	2572 B1	2877 B7	3905 F2	6902 F3	9505 A2	9584 B5	
2260 F7	2575 C1	2878 B8	3907 F1	6903 F3	9507 A2	9585 C5	
2261 F7	2576 B1	2879 A5	3909 F1	6904 F3	9508 A2	9586 C5	
2262 D8	2581 C1	2880 A5	3910 F1	7257 E5	9509 B1	9588 B7	
2263 D8	2582 B2	2881 A7	3912 G1	7258 E5	9510 B2	9589 A8	
2264 G8	2593 C3	2882 A7	3915 G2	7301 G6	9511 C3	9590 A8	
2265 G8	2594 B3	2901 G2	3916 F3	7302 G7	9513 A2	9591 A8	
2266 E6	2603 A8	2902 G3	3917 G3	7303 G6	9514 A2	9592 B8	
2268 D6	2604 A8	2905 G2	3919 G2	7501 C3	9515 D3	9593 B8	
2269 D8	2607 A8	2912 G2	3926 G3	7571 B1	9516 B5	9599 C8	
2272 C8	2608 A8	2913 G1	3927 G3	7572 A2	9517 B5	9600 C8	
2275 D7	2611 A8	2919 G1	3930 G3	7644 B3	9520 D3	9601 C8	
2278 D6	2612 F1	2923 G2	3931 G3	7901 G3	9521 B2	9603 D6	
2280 F2	2613 E2	2924 F3	3933 F3	7910 G8	9522 B2	9604 D6	
2283 E5	2614 A8	2925 G4	5301 F5	9251 E7	9523 B2	9605 D6	
2287 C8	2617 A8	3254 C8	5302 F5	9252 F8	9524 B3	9606 C8	
2288 D5	2618 A8	3257 C8	5303 F4	9253 E4	9525 B2	9608 D6	
2290 G8	2629 B7	3265 E6	5304 F4	9254 E4	9526 B2	9609 D6	
2292 G7	2630 B7	3270 E4	5305 F4	9255 D5	9527 B3	9610 D6	
2293 D8	2631 A4	3271 E4	5306 F4	9256 D6	9528 B2	9611 D6	
2297 F2	2632 A6	3291 G8	5901 F2	9257 G2	9529 B2	9613 C5	
2299 F2	2637 C7	3296 F8	5902 F1	9258 D8	9530 C2	9614 C5	
2302 F5	2639 B4	3297 F8	6251 F8	9259 D8	9531 B2	9615 D5	
2303 F5	2641 C6	3298 E7	6252 F8	9260 E5	9532 C2	9616 D5	
2305 G7	2642 C6	3299 E8	6253 E8	9261 E4	9533 C2	9617 C5	
2306 G6	2643 C6	3301 F4	6254 E8	9262 F5	9534 C2	9618 D4	
2310 F4	2644 C6	3303 G7	6257 E6	9263 F2	9535 C2	9619 D4	
2315 F4	2645 B6	3309 E5	6258 E6	9265 E4	9536 C1	9621 D4	
2316 G4	2646 C6	3311 F4	6259 D6	9267 E4	9537 D1	9624 D7	

MONO BOARD - MAPPING COPPER SIDE VIEW

2270 G8	2552 C4	2868 C6	3319 F4	3556 B4	3656 A6	3889 E2	4516 B1	7256 E2
2271 G8	2555 D3	2869 C6	3320 F3	3557 B3	3657 A6	3890 E2	4517 B2	7259 F2
2273 G7	2556 D3	2871 B6	3322 G5	3560 F1	3658 A6	3891 F4	4518 B2	7260 E2
2274 G7	2559 C3	2872 C6	3323 G4	3562 B3	3659 B7	3892 G4	4519 C1	7261 E2
2276 E6	2569 F1	2873 A4	3324 G5	3563 E2	3660 B8	3893 E4	4520 D2	7304 G4
2277 E7	2570 B3	2874 B4	3326 G4	3571 B1	3661 B7	3894 D2	4521 D2	7305 F6
2281 G9	2573 B1	2875 A6	3327 G4	3572 B1	3662 B8	3895 F2	4522 D2	7306 F6
2282 G9	2574 B1	2876 B6	3329 G4	3573 B1	3663 A4	3896 F2	4523 D2	7307 F6
2295 G9	2577 C1	2883 C6	3330 G4	3574 B1	3664 A5	3902 G2	4524 D2	7309 F4
2298 E2	2578 B1	2884 C6	3334 F6	3575 B1	3665 A5	3903 F1	4526 E2	7310 G4
2301 F4	2579 C1	2885 B4	3335 F6	3576 B1	3666 A6	3906 G2	4528 D3	7503 C4
2304 G6	2580 B1	2886 B4	3336 F6	3577 C1	3667 A7	3908 G2	4529 D3	7504 B3
2307 F5	2583 C2	2887 A6	3339 F6	3578 B1	3668 A8	3911 G2	4530 C2	7601 A8
2308 G5	2584 B2	2888 A6	3340 F6	3579 C1	3669 A7	3913 G2	4531 C2	7621 A9
2309 G5	2585 B1	2903 G2	3343 F6	3580 B1	3670 A8	3914 G2	4532 C3	7622 A9
2311 G5	2586 B1	2904 G2	3356 F3	3581 C1	3671 C7	3918 G3	4533 C2	7641 B7
2312 G5	2595 C3	2906 G2	3358 G4	3582 B2	3672 B7	3920 G3	4537 A3	7642 A5
2313 G5	2596 B3	2907 G2	3359 G4	3585 C2	3673 D4	3921 G3	4538 A4	7643 A7
2314 F5	2599 C3	2908 G2	3360 G4	3586 B2	3674 D4	3922 G3	4539 B4	7651 F4
2319 G5	2600 B3	2909 F1	3361 F4	3587 B2	3675 C7	3925 G3	4540 A3	7652 G4
2320 G5	2605 A8	2910 G2	3362 G5	3589 B2	3676 C7	3928 G3	4541 A6	7653 D4
2321 F5	2606 A8	2911 G2	3363 G4	3590 B2	3677 B5	3929 G3	4542 A6	7654 D2
2324 F4	2610 A8	2914 G2	3501 B6	3591 C3	3678 B5	3932 F3	4543 A6	7655 F1
2325 F5	2615 A8	2915 G2	3502 C6	3592 B3	3679 D4	3934 G3	4544 A6	7656 F2
2326 G4	2616 A8	2916 F2	3509 A6	3593 C3	3680 D3	3935 G3	4545 B8	7657 C5
2327 G4	2619 A9	2917 G1	3510 A6	3594 B3	3681 B5	3936 G4	4548 C8	7658 C5
2333 F4	2620 A9	2918 G2	3511 B1	3595 C3	3682 B5	3937 G4	4550 C6	7660 E1
2337 G5	2622 D3	2920 G2	3512 B1	3596 B3	3683 A7	3938 B9	4551 C6	7661 E1
2338 G5	2623 D3	2921 F2	3513 D2	3601 A8	3684 A7	3939 B9	4552 C6	7662 E2
2341 G5	2624 B2	2922 G2	3514 D2	3602 A8	3685 F2	3940 C6	4553 C5	7902 G3
2345 G4	2625 B2	2926 E1	3515 E1	3603 A8	3686 E2	3941 B6	4555 C4	7903 G3
2347 G5	2626 B2	2927 G3	3516 E1	3604 A8	3687 A7	3943 E2	4556 C5	7904 G3
2348 G4	2627 D3	2928 F3	3517 E1	3605 A8	3688 A7	3944 B4	4557 C4	7906 F3
2351 G6	2628 B7	2929 G3	3518 E1	3606 A8	3689 E4	3945 A4	4558 C4	7908 G9
2358 F5	2633 C7	2930 G1	3519 E1	3607 A8	3690 E4	3946 G2	4559 C5	7909 G3
2359 F5	2634 B5	2931 G1	3520 E1	3608 A8	3692 E2	3947 G1	4560 E1	
2360 F4	2635 A7	2932 C1	3521 D1	3609 A8	3693 F1	3948 A6	4563 G6	
2363 F5	2636 C7	2933 C1	3522 D1	3610 A8	3695 D8	3949 A6	4564 A1	
2501 B1	2638 B5	2934 A1	3523 D1	3611 A9	3696 C5	3950 D2	4565 C4	
2502 B1	2671 C7	2935 F6	3524 D1	3612 A9	3698 E3	3951 D2	4566 C4	
2505 A1	2672 C7	2936 F6	3525 D1	3613 C3	3699 C6	3952 A1	4641 A6	
2506 A1	2673 B4	2937 A8	3526 D1	3614 B3	3700 B6	3953 A1	4642 A5	
2507 A1	2674 B4	3251 F2	3527 D1	3615 C3	3851 E2	3954 B1	4643 D7	
2508 C4	2675 B7	3252 E2	3528 D1	3616 B3	3852 E1	3955 B1	4644 A6	
2509 C4	2676 B7	3253 E2	3529 D1	3618 F1	3853 F1	4251 E7	4649 B8	
2510 C3	2677 B7	3255 G8	3530 C1	3619 E2	3854 E1	4252 E3	4650 B5	
2511 D2	2678 B7	3256 D5	3531 C1	3621 C6	3856 E2	4253 E7	4651 C7	
2512 D2	2679 A5	3258 D5	3532 C1	3622 A8	3857 F1	4254 D5	4652 F1	
2513 E1	2680 A5	3259 E2	3533 C1	3623 A9	3858 E1	4255 F5	4653 A6	
2514 E1	2681 A7	3260 E2	3534 C1	3633 B2	3859 E2	4256 C3	4901 G3	
2515 E1	2682 A7	3263 E2	3537 C1	3634 B2	3860 E2	4257 F3	4902 G2	
2516 E1	2683 B7	3264 E3	3538 C1	3635 B2	3871 B6	4258 E5	4903 G2	
2517 D1	2684 C7	3266 E4	3539 C1	3636 C4	3872 C6	4259 D5	4904 F2	
2518 D1	2685 A4	3267 E3	3540 C1	3637 C4	3873 B6	4260 C8	4905 B3	
2519 D1	2686 B5	3268 E5	3541 C4	3638 C4	3874 C6	4283 D9	4906 C5	
2520 D1	2687 A7	3269 E5	3542 C4	3639 C4	3875 A4	4284 D9	4907 F4	
2521 D1	2688 A7	3272 E2	3543 C4	3641 B6	3876 B4	4285 D9	4908 E3	
2522 C1	2851 E1	3292 G8	3544 C4	3642 C6	3877 A4	4287 D5	4909 F3	
2523 D3	2852 E1	3293 G9	3545 C4	3643 C6	3878 B4	4320 G5	4910 F3	
2524 D3	2855 E2	3294 G9	3546 C4	3644 C6	3879 A6	4501 E1	4911 B1	
2525 C1	2856 E1	3295 G8	3547 C4	3645 B6	3880 A6	4502 D1	4912 E7	
2526 C1	2857 E1	3304 F4	3548 C4	3646 C6	3881 A6	4503 C1	4913 G7	
2529 B3	2861 A2	3305 F5	3549 D3	3649 A4	3882 B6	4504 B1	4914 C8	
2530 C3	2862 B6	3306 F5	3550 D3	3650 B4	3883 B7	4505 A1	4915 G4	
2545 C4	2863 C6	3307 F4	3551 B5	3651 A4	3884 B7	4506 A3	4916 C8	
2546 C4	2864 A4	3308 G5	3552 C5	3652 B4	3885 A5	4512 B4	4917 B8	
2549 C4	2865 B4	3310 F4	3553 C2	3653 A6	3886 A5	4513 A1	4918 B7	
2550 C4	2866 A6	3314 G5	3554 D3	3654 B6	3887 A7	4514 B1	7253 D6	
2551 C4	2867 A6	3315 F4	3555 C3	3655 A6	3888 A7	4515 B1	7255 E3	

11-15

MONO BOARD - COMPONENT SIDE VIEW

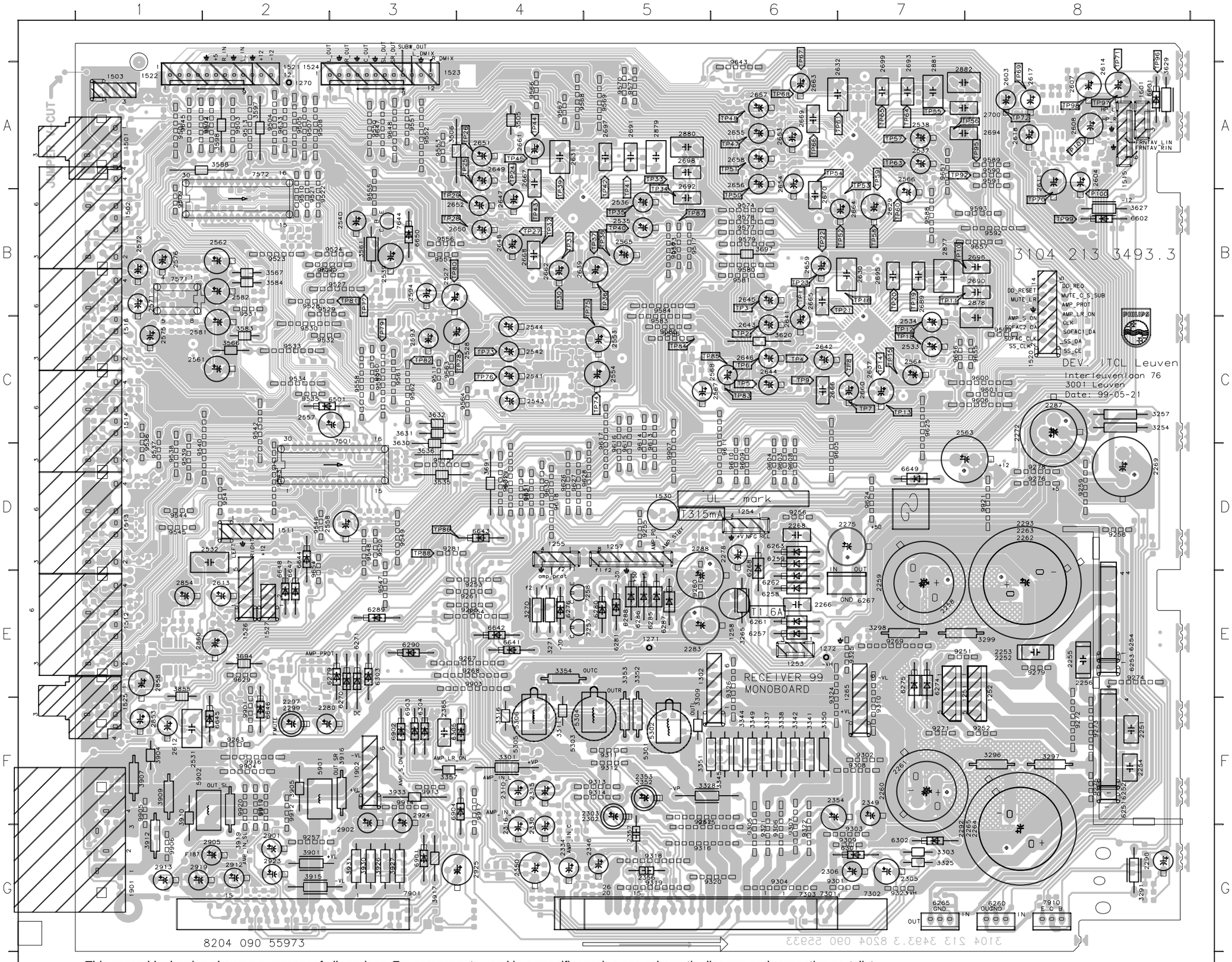

This assembly drawing shows a summary of all versions. For components used in a specific version see schematic diagram and respective partslist.

11-16

MONO BOARD - COPPER SIDE VIEW

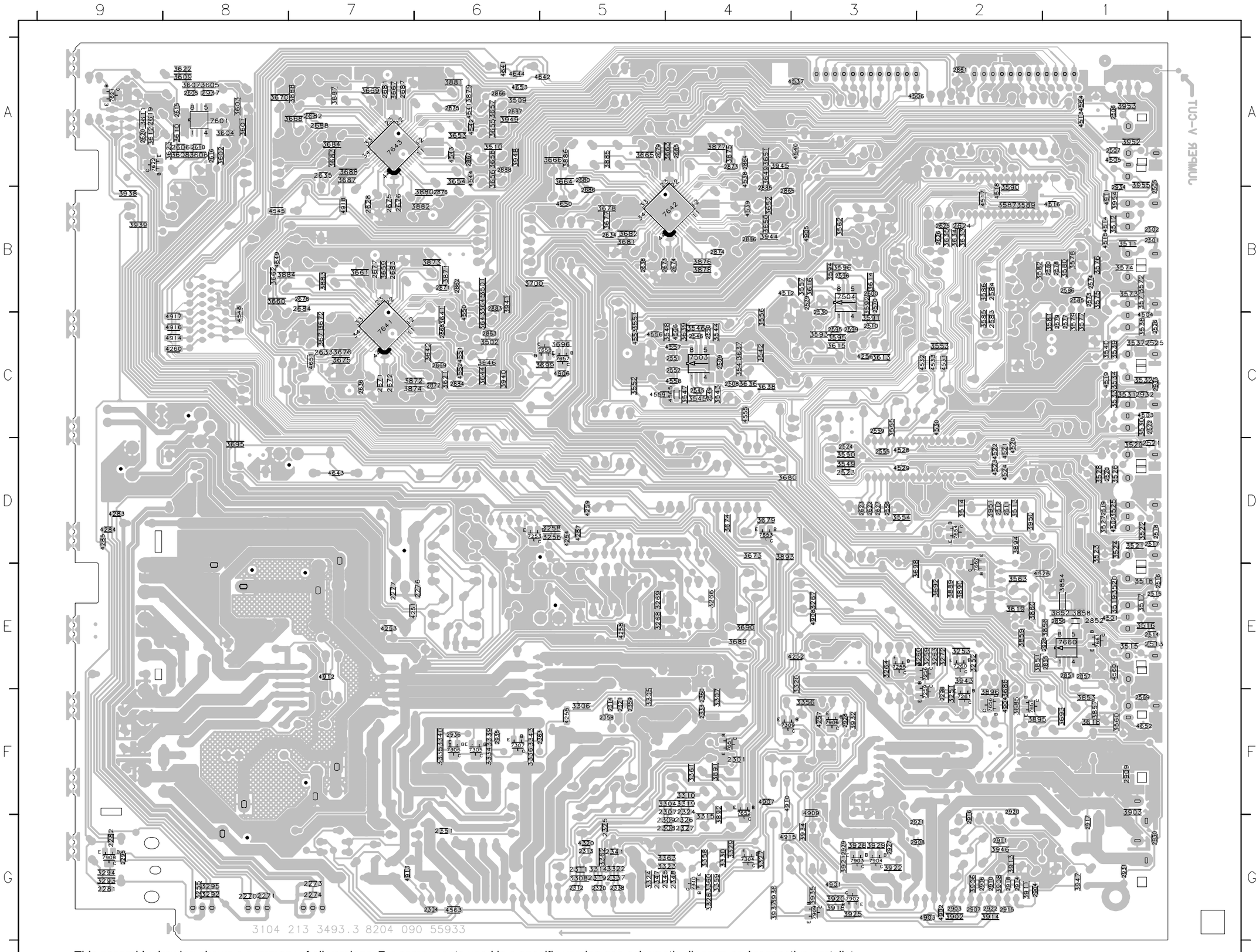

This assembly drawing shows a summary of all versions. For components used in a specific version see schematic diagram and respective partslist.

12-1

EXPLODED VIEW

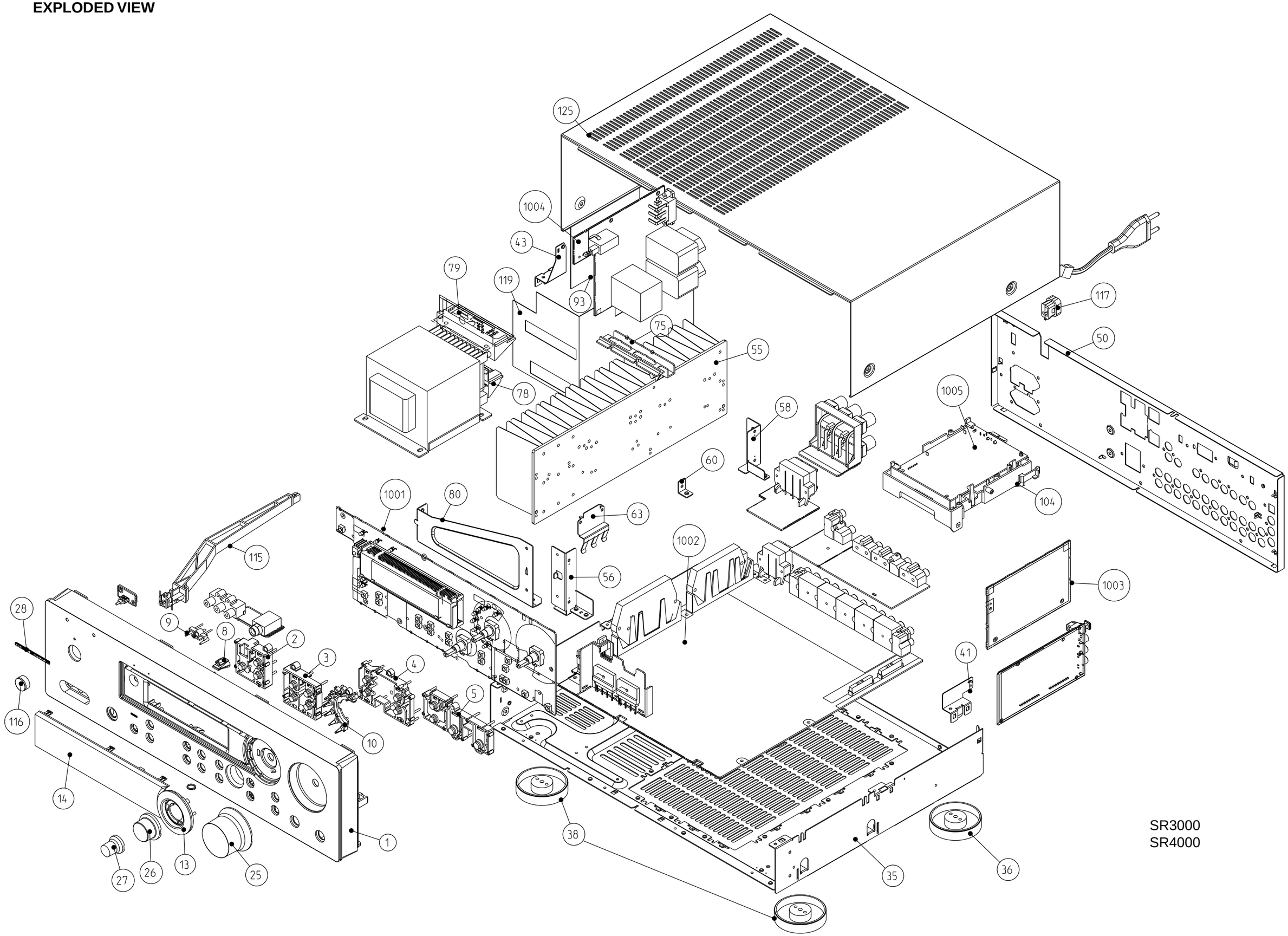

SR3000
SR4000

MECHANICAL PARTSLIST - EXPLODED VIEW

POS. NO	MODEL	VERS. COLOR	PART NO.	DESCRIPTION
0001	3000	U	3103 307 97730	FRONT CAB ASSY SR3000/U
0001	3000	N	3103 307 97690	FRONT CAB ASSY SR3000/N
0001	4000	U, K (BLACK)	3103 307 97740	FRONT CAB ASSY SR4000 /U, /K BLACK
0001	4000	K (GOLD)	3103 307 98120	FRONT CAB ASSY SR4000 /K GOLD
0001	4000	N	3103 307 97710	FRONT CAB ASSY SR4000/N
0002		BLACK	3103 304 67030	BUTTON-SURROUND
0002		GOLD	3103 307 98100	BUTTON-SURROUND GOLD
0003		BLACK	3103 304 67040	BUTTON-TUNER
0003		GOLD	3103 307 98110	BUTTON-TUNER GOLD
0004		BLACK	3103 304 67020	BUTTON-MENU
0004		GOLD	3103 307 98090	BUTTON-MENU GOLD
0005		BLACK	3103 304 67010	BUTTON-BASS TREBLE
0005		GOLD	3103 307 98080	BUTTON-BASS TREBLE GOLD
0008			3103 304 67070	LIGHT-GUIDE-SURROUND
0009	4000		3103 304 67080	LIGHT-GUIDE-VIRTUAL-HALL
0010	3000		3103 304 67120	LIGHT-GUIDE-SELECTOR-6CH
0010	4000		3103 304 67060	LIGHT-GUIDE-SELECTOR
0013	3000		3103 307 97700	RING-KNOB-SOURCE-SEL-PRI
0013	4000	BLACK	3103 307 97720	RING-KNOB-SOURCE-SEL-PRI
0013	4000	GOLD	3103 307 98160	RING-KNOB-SOURCE-SEL-PRI GOLD
0014			3103 304 67110	WINDOW-DISPLAY
0025		BLACK	3103 304 07010	KNOB-VOLUME
0025		GOLD	3103 307 98150	KNOB-VOLUME GOLD
0026		BLACK	3103 304 07000	KNOB-SOURCE-SEL
0026		GOLD	3103 307 98140	KNOB-SOURCE-SEL GOLD
0027		BLACK	3103 304 06990	KNOB-MENU-NAV
0027		GOLD	3103 307 98130	KNOB-MENU-NAV GOLD
0028			4822 454 11825	BADGE MARANTZ
0029			4822 492 51374	SPRING
0036			4822 462 42129	FOOT GOLD
0038			3103 307 97870	LEG GOLD MARANTZ
0094			4822 466 93148	SPACER STEEL
0115			3103 304 67100	POWER-ROD
0116		BLACK	4822 410 12499	BUTTON POWER
0116		GOLD	3103 307 99120	BUTTON POWER GOLD
0117			4822 532 60948	BUSH PLASTIC
0125		BLACK	nsp	COVERPLATE
0125		GOLD	nsp	COVERPLATE GOLD
0350		U	4822 320 11094	FM AERIAL 300R
0350		N, K	4822 303 50063	FM AERIAL 75R
0352			4822 303 50082	AM FRAME AERIAL
0356	3000		3139 228 84030	IRT ASSY RC2537/02 PACKED
0356	4000		3104 219 03910	IRT ASSY PACKED
0358		K	4822 263 21092	ADAPTER PLUG
0387	3000	U	3104 215 36170	USER GUIDE SR3000/U
0387	3000	N	3104 215 36150	USER GUIDE SR3000/N
0387	4000	U	3104 215 36180	USER GUIDE SR4000/U
0387	4000	N	3104 215 36160	USER GUIDE SR4000/N
0387	4000	K	3104 215 36190	USER GUIDE SR4000/K
1003	4000		3104 217 05750	MULTI CHANNEL DECODING MODULE
▲ 5001	3000	U	3103 308 30240	MAINS TRAFO SR3000/U
▲ 5001	3000	N	3103 308 30370	MAINS TRAFO SR3000/N
▲ 5001	4000	U	4822 146 21225	MAINS TRAFO SR4000/U
▲ 5001	4000	N	4822 146 11165	MAINS TRAFO SR4000/N
▲ 5001	4000	K	4822 146 11169	MAINS TRAFO SR4000/K
8002			4822 320 12706	FFC 15P - 220MM
▲ 8020		N, K	4822 321 11139	MAINS CORD

Note: Only the parts mentioned in this list are normal service parts.
nsp = Part is listed for reference only. **MARANTZ** will **NOT** supply these parts.

ELECTRICAL PARTSLIST - MONO BOARD

POS. NO	MODEL	VERS. COLOR	PART NO.	DESCRIPTION
0026			4822 492 11068	SPRING
				MISCELLANEOUS
▲ 1258	3000		4822 071 51602	19372(1.6A)
1304	3000		2422 015 19011	CON BM CLICK H 6P F 3*RDBK B
1306	4000		2422 015 19189	CON BM SCREW H 6P F RDBK B
1502 ∫ 1514			4822 267 31823	YKC21-3424
1516	4000		4822 267 31823	YKC21-3424
1520			4822 265 10981	15FE-BT-VK-N
1521	4000		2422 025 11067	CON BM V 12P F 2.50
1523				
▲ 1530	4000		4822 071 53151	19372(315MA)
1541			4822 267 41009	MTZJ2.0B
1542			4822 267 31448	CONNECTOR
1550			4822 267 31729	CONNECTOR
1801			4822 267 31996	CONN. 1P
1802			4822 265 11619	CINCH 2P
1803			4822 265 11619	CINCH 2P
1901			4822 265 10967	YKD21-0185
				CAPACITORS
2251			5322 121 42578	100NF 5% 250V
2252	3000		4822 121 43526	47NF 5% 250V
2253	4000		4822 121 43526	47NF 5% 250V
2254			5322 121 42578	100NF 5% 250V
2255	3000		4822 121 43526	47NF 5% 250V
2256	4000		4822 121 43526	47NF 5% 250V
2258	3000		4822 124 42367	3300UF 20% 35V
2259	4000		4822 124 80415	4700UF 20% 50V
2260	4000		4822 124 80415	4700UF 20% 50V
2261	3000		4822 124 42367	3300UF 20% 35V
2263	3000		4822 124 80415	4700UF 20% 50V
2265	3000		4822 124 80415	4700UF 20% 50V
2266			5322 121 42386	100NF 5% 63V
2268			5322 121 42386	100NF 5% 63V
2269			4822 124 11583	2200UF 20% 35V
2270			4822 126 13838	100NF Y5V 0805 50V P80M20
2271			4822 126 14583	470NF 10% 16V XTR 0805
2272	4000		4822 124 12328	6800UF 16V
2273			4822 126 14585	100NF 10% X7R 0805 50V
2274			4822 126 14583	470NF 10% 16V XTR 0805
2275			4822 124 81144	1000U 16V
2276			4822 126 14585	100NF 10% X7R 0805 50V
2277			4822 126 14583	470NF 10% 16V XTR 0805
2278			4822 124 21913	1UF 20% 63V
2280			4822 124 41584	100UF 20% 10V
2281			4822 126 13838	100NF Y5V 0805 50V P80M20
2282			4822 126 14583	470NF 10% 16V XTR 0805
2283	3000		4822 124 11769	220UF 20% 50V
2287	3000		4822 124 40784	3300UF 20% 16V
2290			4822 124 40248	10UF 20% 63V
2292	4000		4822 124 12132	6800UF 20% LA5 63V
2293	4000		4822 124 12132	6800UF 20% LA5 63V
2295			4822 122 33177	10NF 20% X7R 50V
2297	3000		4822 124 40248	10UF 20% 63V
2298	3000		4822 126 13751	47NF 10% X7R 63V
2298	4000		5322 122 32654	22NF 10% X7R 63V
2299	4000		5322 124 40641	10UF 20% 100V
2301			5322 122 32654	22NF 10% X7R 63V
2302	3000		4822 124 81151	22UF 50V
2303	4000		4822 124 40764	22UF 100V
2305	4000		5322 124 40641	10UF 20% 100V
2306			4822 124 40248	10UF 20% 63V
2307	3000		5322 122 32287	4,7PF 5% NP0 50V
2308	4000		5322 122 32448	10PF 5% NP0 63V CASE 0805
2309	4000		5322 122 32448	10PF 5% NP0 63V CASE 0805
2310			4822 124 22652	2,2UF 20% 50V
2311			5322 122 32268	470PF 10% 50V
2313			4822 122 33575	220PF 5% NP0 63V CASE 0805
2314			4822 126 13473	220NF 80-20% 50V
2315			4822 124 81151	22UF 50V
2316			4822 124 22652	2,2UF 20% 50V

POS. NO	MODEL	VERS. COLOR	PART NO.	DESCRIPTION
2317	3000		5322 126 10223	4,7NF 10% X7R 63V
2319			5322 122 32268	470PF 10% 50V
2321			4822 126 13473	220NF 80-20% 50V
2322	3000		5322 122 32531	100PF 5%NP0 50V
2324	3000		5322 122 32287	4,7PF 5% NP0 50V
2325			4822 122 33575	220PF 5% NP0 63V CASE 0805
2326	4000		5322 122 32448	10PF 5% NP0 63V CASE 0805
2327	4000		5322 122 32448	10PF 5% NP0 63V CASE 0805
2328	3000		5322 126 10223	4,7NF 10% X7R 63V
2330			4822 124 81151	22UF 50V
2331	3000		5322 122 32531	100PF 5% NP0 50V
2333			4822 126 13473	220NF 80-20% 50V
2334			4822 124 22652	2,2UF 20% 50V
2335	3000		5322 126 10223	4,7NF 10% X7R 63V
2337			5322 122 32268	470PF 10% 50V
2339	3000		5322 122 32531	100PF 5% NP0 50V
2341			4822 122 33575	220PF 5% NP0 63V CASE 0805
2345	4000		5322 122 32448	10PF 5% NP0 63V CASE 0805
2346			4822 124 81151	22UF 50V
2347	3000		5322 122 32287	4,7PF 5% NP0 50V
2348	4000		5322 122 32448	10PF 5% NP0 63V CASE 0805
2349			4822 124 40248	10UF 20% 63V
2350			4822 124 40181	220UF 20% 10V
2351	3000		4822 126 13751	47NF 10% X7R 63V
2352	3000		4822 124 81151	22UF 50V
2353	4000		4822 124 40764	22UF 100V
2354	4000		5322 124 40641	10UF 20% 100V
2357			4822 126 12882	100NF +80-20% 50V
2358 ∫ 2360			4822 126 13473	220NF 80-20% 50V
2365			4822 121 41857	10NF 5% 250V
2371 ∫ 2373	4000		5322 126 10223	4,7NF 10% X7R 63V
2374 ∫ 2376	4000		5322 122 32531	100PF 5% NP0 50V
2501			5322 126 10511	1NF 5% NP0 50V
2502			5322 126 10511	1NF 5% NP0 50V
2505 ∫ 2507			5322 126 10511	1NF 5% NP0 50V
2508			5322 122 32531	100PF 5% NP0 50V
2509			5322 122 32531	100PF 5% NP0 50V
2510	4000		5322 122 32531	100PF 5% NP0 50V
2511 ∫ 2524			5322 122 32531	100PF 5% NP0 50V
2525	4000		5322 122 32531	100PF 5% NP0 50V
2526	4000		5322 122 32531	100PF 5% NP0 50V
2527	4000		4822 124 41751	47UF 20% 50V
2528	4000		4822 124 41751	47UF 20% 50V
2529	4000		4822 126 13838	100NF Y5V 0805 50V P80M20
2530	4000		4822 126 13838	100NF Y5V 0805 50V P80M20
2531			4822 121 42408	220NF 5% 63V
2532			4822 121 42408	220NF 5% 63V
2533 ∫ 2538			4822 124 40248	10UF 20% 63V
2539			4822 124 40207	100UF 20% 25V
2540			4822 124 40433	47UF 20% 25V
2541			4822 124 40248	10UF 20% 63V
2542			4822 124 40248	10UF 20% 63V
2543			4822 124 41584	100UF 20% 10V
2544			4822 124 41584	100UF 20% 10V
2545			5322 122 32531	100PF 5% NP0 50V
2546			5322 122 32531	100PF 5% NP0 50V
2549			5322 122 32658	22PF 5% 50V
2550			5322 122 32658	22PF 5% 50V
2551			4822 126 13838	100NF Y5V 0805 50V P80M20
2552			4822 126 13838	100NF Y5V 0805 50V P80M20
2553			4822 124 41751	47UF 20% 50V
2554			4822 124 41751	47UF 20% 50V

POS. NO	MODEL	VERS. COLOR	PART NO.	DESCRIPTION
2555			4822 126 13838	100NF Y5V 0805 50V P80M20
2556			4822 126 13838	100NF Y5V 0805 50V P80M20
2557			4822 124 41751	47UF 20% 50V
2558			4822 124 41751	47UF 20% 50V
2559			4822 126 12105	CER2 0805 X7R 50V 33NF PM5
2561	4000		4822 124 40764	22UF 100V
2562	4000		4822 124 40764	22UF 100V
2563			4822 123 14025	16V 2200U 20%
2564 ∫ 2566			4822 124 22652	2,2UF 20% 50V
2567			4822 124 40769	4,7UF 20% 100V
2568			4822 124 40769	4,7UF 20% 100V
2569			5322 122 32531	100PF 5% NP0 50V
2570	4000		5322 122 32531	100PF 5% NP0 50V
2571	4000		4822 124 40248	10UF 20% 63V
2572	4000		4822 124 40248	10UF 20% 63V
2573	4000		5322 122 33538	150PF 2% NP0 63V
2574	4000		5322 122 33538	150PF 2% NP0 63V
2575	4000		4822 124 40248	10UF 20% 63V
2576	4000		4822 124 40248	10UF 20% 63V
2577	4000		4822 122 33177	10NF 20% X7R 50V
2578	4000		4822 122 33177	10NF 20% X7R 50V
2579	4000		4822 122 33127	2,2NF 10% X7R 63V
2580	4000		4822 122 33127	2,2NF 10% X7R 63V
2581	4000		4822 124 41751	47UF 20% 50V
2582	4000		4822 124 41751	47UF 20% 50V
2583	4000		2222 861 15272	CER1 0805 NP0 50V
2584	4000		2222 861 15272	CER1 0805 NP0 50V
2585	4000		4822 126 13695	82PF 1% NP0 63V
2586	4000		4822 126 13695	82PF 1% NP0 63V
2593	4000		4822 124 81151	22UF 50V
2594	4000		4822 124 81151	22UF 50V
2595	4000		5322 122 32531	100PF 5% NP0 50V
2596	4000		5322 122 32531	100PF 5% NP0 50V
2599	4000		5322 122 32658	22PF 5% 50V
2600	4000		5322 122 32658	22PF 5% 50V
2603			4822 124 81151	22UF 50V
2604			4822 124 81151	22UF 50V
2605			4822 126 13692	47PF 1% NP0 63V
2606			4822 126 13692	47PF 1% NP0 63V
2607			4822 124 41751	47UF 20% 50V
2608			4822 124 41751	47UF 20% 50V
2609			4822 122 33575	220PF 5% NP0 63V CASE 0805
2610			4822 122 33575	220PF 5% NP0 63V CASE 0805
2611			4822 124 40207	100UF 20% 25V
2612			4822 124 40248	10UF 20% 63V
2613			4822 124 40248	10UF 20% 63V
2614			4822 124 40207	100UF 20% 25V
2615			5322 122 32654	22NF 10% X7R 63V
2616			5322 122 32654	22NF 10% X7R 63V
2617			4822 124 40248	10UF 20% 63V
2618			4822 124 40248	10UF 20% 63V
2619			5322 122 32531	100PF 5% NP0 50V
2620			5322 122 32531	100PF 5% NP0 50V
2622 ∫ 2624			5322 122 32531	100PF 5% NP0 50V
2625 ∫ 2627	4000		5322 122 32531	100PF 5% NP0 50V
2628			4822 126 14585	100NF 10% X7R 0805 50V
2629			4822 124 41751	47UF 20% 50V
2630 ∫ 2632			5322 121 42386	100NF 5% 63V
2633 ∫ 2635			5322 122 32654	22NF 10% X7R 63V
2636			4822 126 14585	100NF 10% X7R 0805 50V
2637			4822 124 41751	47UF 20% 50V
2638			4822 126 14585	100NF 10% X7R 0805 50V
2639			4822 124 41751	47UF 20% 50V
2641			4822 124 21913	1UF 20% 63V

ELECTRICAL PARTSLIST - MONO BOARD

POS. NO	MODEL	VERS. COLOR	PART NO.	DESCRIPTION
2642				
∫			4822 124 21913	1UF 20% 63V
2652				
2655				
∫			4822 124 21913	1UF 20% 63V
2658				
2659				
∫			4822 124 22652	2,2UF 20% 50V
2664				
2665				
∫			4822 121 43526	47NF 5% 250V
2670				
2671				
∫			5322 122 31866	6,8NF 10% X7R 63V
2676				
2677				
∫			5322 122 32654	22NF 10% X7R 63V
2688				
2689				
∫			5322 121 42465	68NF 5% 63V
2700				
2805				
∫			4822 126 14585	100NF 10% X7R 0805 50V
2808				
2809			5322 122 34098	10NF 10% X7R 63V
2810			4822 124 12245	220UF 20% 10V
2811			5322 122 34098	10NF 10% X7R 63V
2812			4822 124 80144	220UF 20% 25V
2813			4822 124 21913	1UF 20% 63V
2814			4822 126 13692	47PF 1% NP0 63V
2815			4822 126 14585	100NF 10% X7R 0805 50V
2816			5322 122 32654	22NF 10% X7R 63V
2817			4822 124 21913	1UF 20% 63V
2818			5322 122 32654	22NF 10% X7R 63V
2821			5322 122 32654	22NF 10% X7R 63V
2822			5322 122 32654	22NF 10% X7R 63V
2831			5322 122 32531	100PF 5% NP0 50V
2832			4822 126 14585	100NF 10% X7R 0805 50V
2833			5322 122 32654	22NF 10% X7R 63V
2834				
∫			5322 122 32531	100PF 5% NP0 50V
2837				
2851			5322 122 32658	22PF 5% 50V
2852			5322 122 32658	22PF 5% 50V
2853			4822 124 81151	22UF 50V
2854			4822 124 81151	22UF 50V
2855			5322 122 32531	100PF 5% NP0 50V
2856			5322 122 32531	100PF 5% NP0 50V
2857			4822 126 14585	100NF 10% X7R 0805 50V
2858			4822 124 41751	47UF 20% 50V
2860			4822 124 41751	47UF 20% 50V
2861			5322 122 32654	22NF 10% X7R 63V
2862				
∫			5322 12232531	100PF 5% NP0 50V
2867				
2868			4822 122 33575	220PF 5% NP0 63V CASE 0805
2869			4822 122 33575	220PF 5% NP0 63V CASE 0805
2871				
∫			4822 122 33177	10NF 20% X7R 50V
2873				
2875			4822 122 33177	10NF 20% X7R 50V
2876			4822 122 33177	10NF 20% X7R 50V
2877				
∫			5322 121 42386	100NF 5% 63V
2882				
2883				
∫			5322 126 10511	1NF 5% NP0 50V
2886				
2887			4822 122 33127	2,2NF 10% X7R 63V
2888			4822 122 33127	2,2NF 10% X7R 63V
2901			4822 124 81151	22UF 50V
2902			4822 124 40248	10UF 20% 63V
2903			5322 122 32287	4,7PF 5% NP0 50V
2904			4822 126 13751	47NF 10% X7R 63V

POS. NO	MODEL	VERS. COLOR	PART NO.	DESCRIPTION
2905			4822 124 22652	2,2UF 20% 50V
2906			5322 122 32268	470PF 10% 50V
2908			4822 126 13473	220NF 80-20% 50V
2909			5322 126 10223	4,7NF 10% X7R 63V
2910			4822 122 33575	220PF 5% NP0 63V CASE 0805
2911			5322 122 32654	22NF 10% X7R 63V
2912			4822 124 81151	22UF 50V
2913			4822 124 22652	2,2UF 20% 50V
2914			5322 122 32268	470PF 10% 50V
2916			4822 126 13473	220NF 80-20% 50V
2917			5322 126 10223	4,7NF 10% X7R 63V
2918			4822 122 33575	220PF 5% NP0 63V CASE 0805
2919			4822 124 81151	22UF 50V
2920			4822 126 13473	220NF 80-20% 50V
2921			4822 126 13473	220NF 80-20% 50V
2922			5322 122 32287	4,7PF 5% NP0 50V
2923			4822 124 81151	22UF 50V
2924			4822 124 40248	10UF 20% 63V
2925			4822 124 40181	220UF 20% 10V
2926			4822 126 14585	100NF 10% X7R 0805 50V
2928			4822 122 33177	10NF 20% X7R 50V
2930				
∫			5322 122 32531	100PF 5% NP0 50V
2933				
2934			5322 126 10511	1NF 5% NP0 50V
2937			5322 126 10794	220PF 5% NP0 63V
				RESISTORS
3251	3000		4822 051 20471	470R00 5% 0,1W
3251	4000		4822 051 10102	1K00 2% 0,25W
3252			4822 117 10837	100K 1% 0.1W
3253			4822 117 10837	100K 1% 0.1W
⚠ 3254			4822 117 11342	0R33 5% 2W
3256			4822 117 10833	10K 1% 0,1W
⚠ 3257			4822 117 11342	0R33 5% 2W
3258			4822 051 20184	180K00 5% 0,1W
3259			4822 117 10361	680R 1% 0,1W
3260			4822 117 10834	47K 1% 0,1W
3263			4822 117 10361	680R 1% 0,1W
3264			4822 117 10837	100K 1% 0.1W
⚠ 3265	4000		4822 052 10479	47R00 5% 0,33W
3266			4822 051 20223	22K00 5% 0,1W
3267	3000		4822 051 20392	3K90 5% 0,1W
3267	4000		4822 117 11507	6K8 1% 0,1W
3268			4822 051 20332	3K30 5% 0,1W
3269			4822 051 20332	3K30 5% 0,1W
⚠ 3270			4822 052 10479	47R00 5% 0,33W
⚠ 3271			4822 052 10479	47R00 5% 0,33W
3272			4822 051 20393	39K00 5% 0,1W
⚠ 3291			4822 052 10109	10R00 5% 0,33W
3292			4822 116 83933	15K 1% 0,1W
3293			4822 117 10833	10K 1% 0,1W
3294			4822 117 10833	10K 1% 0,1W
3295			4822 116 83933	15K 1% 0,1W
⚠ 3301			4822 052 10479	47R00 5% 0,33W
3303	4000		4822 116 83961	6K8 5%
3304			4822 117 11148	56K 1% 0,1W
3305				
∫			4822 117 10834	47K 1% 0,1W
3307				
3308			4822 117 11148	56K 1% 0,1W
3309			4822 050 24708	4R70 1% 0,6W
3310			4822 051 20182	1K80 5% 0,1W
3311			4822 050 24708	4R70 1% 0,6W
3314			4822 117 11148	56K 1% 0,1W
3315			4822 051 20182	1K80 5% 0,1W
3316			4822 050 24708	4R70 1% 0,6W
3319			4822 117 11148	56K 1% 0,1W
3320			4822 051 10102	1K00 2% 0,25W
3322			4822 117 11148	56K 1% 0,1W
3323			4822 051 20182	1K80 5% 0,1W
3324			4822 117 11148	56K 1% 0,1W
3325	4000		4822 116 83961	6K8 5%
3326			4822 051 20333	33K00 5% 0,1W

ELECTRICAL PARTSLIST - MONO BOARD

POS. NO	MODEL	VERS. COLOR	PART NO.	DESCRIPTION		
3327			4822 117 11503	220R	1%	0.1W
▲ 3328			4822 052 10479	47R00	5%	0,33W
3329			4822 117 10837	100K	1%	0.1W
3330			4822 117 10833	10K	1%	0,1W
3334	3000		4822 051 10102	1K00	2%	0,25W
3334	4000		4822 051 20182	1K80	5%	0,1W
3335	3000		4822 051 10102	1K00	2%	0,25W
3335	4000		4822 051 20182	1K80	5%	0,1W
3336	3000		4822 051 10102	1K00	2%	0,25W
3336	4000		4822 051 20182	1K80	5%	0,1W
▲ 3337	3000		4822 117 11744	0R22	5%	1W
▲ 3337	4000		4822 117 11342	0R33	5%	2W
▲ 3338	3000		4822 117 11744	0R22	5%	1W
▲ 3338	4000		4822 117 11342	0R33	5%	2W
3339			4822 117 11139	1K5	1%	0,1W
3340			4822 117 11139	1K5	1%	0,1W
▲ 3341	3000		4822 117 11744	0R22	5%	1W
▲ 3341	4000		4822 117 11342	0R33	5%	2W
▲ 3342	3000		4822 117 11744	0R22	5%	1W
▲ 3342	4000		4822 117 11342	0R33	5%	2W
3343			4822 117 11139	1K5	1%	0,1W
▲ 3344	3000		4822 117 11744	0R22	5%	1W
▲ 3344	4000		4822 117 11342	0R33	5%	2W
▲ 3345	3000		4822 117 11744	0R22	5%	1W
▲ 3345						
∫	4000		4822 117 11342	0R33	5%	2W
▲ 3351						
▲ 3352						
∫			4822 053 10478	4R70	5%	1W
▲ 3354						
3356			4822 117 10834	47K	1%	0,1W
3357	3000		4822 050 21003	10K00	1%	0,6W
3357	4000		4822 116 52257	22K	5%	0,5W
3358			4822 051 10102	1K00	2%	0,25W
3359			4822 117 10837	100K	1%	0.1W
3360			4822 117 10833	10K	1%	0,1W
3361						
∫			4822 051 20471	470R00	5%	0,1W
3363						
3501			4822 117 11383	12K	1%	0,1W
3502			4822 117 11383	12K	1%	0,1W
3505			4822 116 52238	12K	5%	0,5W
3506			4822 116 52238	12K	5%	0,5W
3509			4822 117 11383	12K	1%	0,1W
3510			4822 117 11383	12K	1%	0,1W
3511			4822 051 20101	100R00	5%	0,1W
3512			4822 051 20101	100R00	5%	0,1W
3513			4822 117 10834	47K	1%	0,1W
3514			4822 117 10834	47K	1%	0,1W
3515			4822 051 20471	470R00	5%	0,1W
3516			4822 051 20471	470R00	5%	0,1W
3517			4822 051 20393	39K00	5%	0,1W
3518			4822 051 20393	39K00	5%	0,1W
3519			4822 117 10965	18K	1%	0,1W
3520			4822 117 10965	18K	1%	0,1W
3521			4822 051 20393	39K00	5%	0,1W
3522			4822 051 20393	39K00	5%	0,1W
3523			4822 117 10965	18K	1%	0,1W
3524			4822 117 10965	18K	1%	0,1W
3525			4822 051 20393	39K00	5%	0,1W
3526			4822 051 20393	39K00	5%	0,1W
3527			4822 117 10965	18K	1%	0,1W
3528			4822 117 10965	18K	1%	0,1W
3529			4822 051 20471	470R00	5%	0,1W
3530			4822 051 20471	470R00	5%	0,1W
3531			4822 051 20393	39K00	5%	0,1W
3532			4822 051 20393	39K00	5%	0,1W
3533			4822 117 10965	18K	1%	0,1W
3534			4822 117 10965	18K	1%	0,1W
3535			4822 116 52251	18K	5%	0,5W
3536			4822 116 52251	18K	5%	0,5W
3537	4000		4822 051 20393	39K00	5%	0,1W
3538	4000		4822 051 20393	39K00	5%	0,1W
3539	4000		4822 117 10965	18K	1%	0,1W

POS. NO	MODEL	VERS. COLOR	PART NO.	DESCRIPTION		
3540	4000		4822 117 10965	18K	1%	0,1W
3541			4822 051 20393	39K00	5%	0,1W
3542			4822 051 20393	39K00	5%	0,1W
3543			4822 117 11139	1K5	1%	0,1W
3544			4822 117 11139	1K5	1%	0,1W
3545			4822 051 20332	3K30	5%	0,1W
3546			4822 051 20332	3K30	5%	0,1W
3547	3000		4822 051 20182	1K80	5%	0,1W
3548	3000		4822 051 20182	1K80	5%	0,1W
3549			4822 117 11507	6K8	1%	0,1W
3550			4822 117 11507	6K8	1%	0,1W
3551			4822 117 11504	270R	1%	0.1W
∫						
3554			4822 117 11504	270R	1%	0.1W
3555			4822 051 20332	3K30	5%	0,1W
3556	4000		4822 117 11504	270R	1%	0.1W
3557	4000		4822 117 11504	270R	1%	0.1W
3560			4822 051 10102	1K00	2%	0,25W
▲ 3561			4822 052 10478	4R70	5%	0,33W
3562			4822 051 20471	470R00	5%	0,1W
3563			4822 051 10102	1K00	2%	0,25W
3566	4000		4822 116 83876	270R	5%	0,5W
3567	4000		4822 116 83876	270R	5%	0,5W
3571	4000		4822 117 10834	47K	1%	0,1W
3572	4000		4822 117 10834	47K	1%	0,1W
3573	4000		4822 051 10102	1K00	2%	0,25W
3574	4000		4822 051 10102	1K00	2%	0,25W
3575	4000		4822 117 10837	100K	1%	0.1W
3576	4000		4822 117 10837	100K	1%	0.1W
3577	4000		4822 051 20561	560R00	5%	0,1W
3578	4000		4822 051 20561	560R00	5%	0,1W
3579	4000		4822 051 20394	390K00	5%	0,1W
3580	4000		4822 051 20394	390K00	5%	0,1W
3581	4000		4822 051 20273	27K00	5%	0,1W
3582	4000		4822 051 20273	27K00	5%	0,1W
3583	4000		4822 116 52303	8K2	5%	0,5W
3584	4000		4822 116 52303	8K2	5%	0,5W
3585	4000		4822 117 11449	2K2	1%	0,1W
3586	4000		4822 117 11449	2K2	1%	0,1W
3587	4000		4822 051 20392	3K90	5%	0,1W
3588	4000		4822 116 52276	3K9	5%	0,5W
3589	4000		4822 117 10833	10K	1%	0,1W
3590	4000		4822 117 10833	10K	1%	0,1W
3591	4000		4822 117 10837	100K	1%	0.1W
3592	4000		4822 117 10837	100K	1%	0.1W
3593						
∫	4000		4822 051 20472	4K70	5%	0,1W
3596						
3597	4000		4822 116 52289	5K6	5%	0,5W
3598	4000		4822 116 52289	5K6	5%	0,5W
3601			4822 051 20101	100R00	5%	0,1W
3602			4822 051 20101	100R00	5%	0,1W
3603			4822 117 10837	100K	1%	0.1W
3604			4822 117 10837	100K	1%	0.1W
3605			4822 117 11383	12K	1%	0,1W
3606			4822 117 11383	12K	1%	0,1W
3607			4822 051 20333	33K00	5%	0,1W
3608			4822 051 20333	33K00	5%	0,1W
3609			4822 051 20121	120R00	5%	0,1W
3610			4822 051 20121	120R00	5%	0,1W
3611			4822 117 10834	47K	1%	0,1W
3612			4822 117 10834	47K	1%	0,1W
3613						
∫	4000		4822 051 20471	470R00	5%	0,1W
3616						
3618			4822 117 10834	47K	1%	0,1W
3619			4822 117 10834	47K	1%	0,1W
3620			4822 116 52175	100E	5%	0,5W
3621						
∫			4822 051 20121	120R00	5%	0,1W
3623						
▲ 3627			4822 052 10109	10R00	5%	0,33W
▲ 3629			4822 052 10109	10R00	5%	0,33W

ELECTRICAL PARTSLIST - MONO BOARD

POS. NO	MODEL	VERS. COLOR	PART NO.	DESCRIPTION
3630				
∫			4822 050 11002	1K00 1% 0,4W
3632				
3633				
∫	4000		4822 051 10102	1K00 2% 0,25W
3635				
3636			4822 051 20471	470R00 5% 0,1W
3637			4822 051 20471	470R00 5% 0,1W
3638	3000		4822 051 20471	470R00 5% 0,1W
3639	3000		4822 051 20471	470R00 5% 0,1W
3641				
∫			4822 117 10837	100K 1% 0.1W
3644				
3645			4822 117 10834	47K 1% 0,1W
3646			4822 117 10834	47K 1% 0,1W
3649			4822 117 10837	100K 1% 0.1W
3650			4822 117 10837	100K 1% 0.1W
3651			4822 117 10834	47K 1% 0,1W
3652			4822 117 10834	47K 1% 0,1W
3655			4822 117 10837	100K 1% 0.1W
3656			4822 117 10837	100K 1% 0.1W
3657			4822 117 10834	47K 1% 0,1W
3658			4822 117 10834	47K 1% 0,1W
3659			4822 117 12955	2K7 1% 0,1W 0805
3660			4822 117 12955	2K7 1% 0,1W 0805
3661			4822 051 20562	5K6 5% 0,1W 0805
3662			4822 051 20562	5K6 5% 0,1W 0805
3663			4822 117 12955	2K7 1% 0,1W 0805
3664			4822 117 12955	2K7 1% 0,1W 0805
3665			4822 051 20562	5K6 5% 0,1W 0805
3666			4822 051 20562	5K6 5% 0,1W 0805
3667			4822 117 12955	2K7 1% 0,1W 0805
3668			4822 117 12955	2K7 1% 0,1W 0805
3669			4822 051 20562	5K6 5% 0,1W 0805
3670			4822 051 20562	5K6 5% 0,1W 0805
3671			4822 117 10837	100K 1% 0.1W
3672			4822 117 10837	100K 1% 0.1W
3673			4822 117 11449	2K2 1% 0,1W
3674			4822 117 11449	2K2 1% 0,1W
3675			4822 051 20101	100R00 5% 0,1W
3676			4822 051 20101	100R00 5% 0,1W
3677			4822 117 10837	100K 1% 0.1W
3678			4822 117 10837	100K 1% 0.1W
3679			4822 117 11449	2K2 1% 0,1W
3680			4822 117 11449	2K2 1% 0,1W
3681			4822 051 20101	100R00 5% 0,1W
3682			4822 051 20101	100R00 5% 0,1W
3683			4822 117 10837	100K 1% 0.1W
3684			4822 117 10837	100K 1% 0.1W
3685			4822 117 11449	2K2 1% 0,1W
3686			4822 117 11449	2K2 1% 0,1W
3687			4822 051 20101	100R00 5% 0,1W
3688			4822 051 20101	100R00 5% 0,1W
3689			4822 117 11449	2K2 1% 0,1W
3690			4822 117 11449	2K2 1% 0,1W
3691			4822 116 52256	2K2 5% 0,5W
3692			4822 117 11449	2K2 1% 0,1W
3693			4822 117 11449	2K2 1% 0,1W
3694			4822 116 52256	2K2 5% 0,5W
3695			4822 117 13579	220K 1% 0.1W RC12H 0805
3696			4822 117 10833	10K 1% 0,1W
3697			4822 116 52257	22K 5% 0,5W
3698			4822 117 13579	220K 1% 0.1W RC12H 0805
3699			4822 117 10833	10K 1% 0,1W
3700			4822 051 20223	22K00 5% 0,1W
3801				
∫			4822 117 12521	68R 1% 0,1W
3804				
3805			4822 051 10102	1K00 2% 0,25W
3806			4822 051 10102	1K00 2% 0,25W
▲ 3807			4822 052 10478	4R70 5% 0,33W
▲ 3808			4822 052 10478	4R70 5% 0,33W
3810			4822 117 11449	2K2 1% 0,1W
3812			4822 051 20471	470R00 5% 0,1W

POS. NO	MODEL	VERS. COLOR	PART NO.	DESCRIPTION
3813			4822 051 20121	120R00 5% 0,1W
3815			4822 117 12521	68R 1% 0,1W
3816			4822 117 12521	68R 1% 0,1W
3817			4822 117 11504	270R 1% 0.1W
3818			4822 117 11503	220R 1% 0.1W
3831			4822 051 20101	100R00 5% 0,1W
3832			4822 051 20479	47R00 5% 0,1W
3834			4822 051 20101	100R00 5% 0,1W
3851			4822 051 20472	4K70 5% 0,1W
3852			4822 051 20223	22K00 5% 0,1W
3853	3000		4822 117 10833	10K 1% 0,1W
3853	4000		4822 051 20683	68K00 5% 0,1W
3854			4822 051 20472	4K70 5% 0,1W
3855			4822 116 83876	270R 5% 0,5W
3856			4822 117 11504	270R 1% 0.1W
3857			4822 117 10837	100K 1% 0.1W
3858			4822 117 10837	100K 1% 0.1W
3859			4822 117 10833	10K 1% 0,1W
3860			4822 117 10833	10K 1% 0,1W
3871			4822 051 20332	3K30 5% 0,1W
3872			4822 051 20332	3K30 5% 0,1W
3873			4822 051 10102	1K00 2% 0,25W
3874			4822 051 10102	1K00 2% 0,25W
3875			4822 051 20332	3K30 5% 0,1W
3877			4822 051 10102	1K00 2% 0,25W
3878			4822 051 10102	1K00 2% 0,25W
3879			4822 051 20332	3K30 5% 0,1W
3880			4822 051 20332	3K30 5% 0,1W
3881			4822 051 10102	1K00 2% 0,25W
3882			4822 051 10102	1K00 2% 0,25W
3883				
∫			4822 117 11383	12K 1% 0,1W
3888				
3889			4822 117 11449	2K2 1% 0,1W
3890			4822 117 11449	2K2 1% 0,1W
3891				
∫	3000		4822 051 20562	5K6 5% 0,1W 0805
3893				
3895	3000		4822 051 20562	5K6 5% 0,1W 0805
3896	3000		4822 051 20562	5K6 5% 0,1W 0805
▲ 3901			4822 052 10479	47R00 5% 0,33W
3902			4822 117 11148	56K 1% 0,1W
3903			4822 117 10834	47K 1% 0,1W
3904			4822 116 83884	47K 5% 0,5W
3905			4822 050 24708	4R70 1% 0,6W
3906			4822 117 11148	56K 1% 0,1W
3908			4822 051 20182	1K80 5% 0,1W
3910			4822 050 24708	4R70 1% 0,6W
3911			4822 117 11148	56K 1% 0,1W
3913			4822 051 20182	1K80 5% 0,1W
3914			4822 117 11148	56K 1% 0,1W
▲ 3915			4822 052 10479	47R00 5% 0,33W
▲ 3916			4822 053 10478	4R70 5% 1W
3917			4822 050 23303	33K00 1% 0,6W
3918			4822 117 11503	220R 1% 0.1W
▲ 3919			4822 053 10478	4R70 5% 1W
3920			4822 117 10837	100K 1% 0.1W
3921	3000		4822 051 20182	1K80 5% 0,1W
3921	4000		4822 051 10102	1K00 2% 0,25W
3922	3000		4822 051 20182	1K80 5% 0,1W
3922	4000		4822 051 10102	1K00 2% 0,25W
3925			4822 117 10833	10K 1% 0,1W
▲ 3926			4822 117 11744	0R22 5% 1W
▲ 3927	4000		4822 117 11744	0R22 5% 1W
3928			4822 117 11139	1K5 1% 0,1W
3929			4822 117 11139	1K5 1% 0,1W
▲ 3930			4822 117 11744	0R22 5% 1W
▲ 3931	4000		4822 117 11744	0R22 5% 1W
3932			4822 117 10834	47K 1% 0,1W
3933			4822 050 21003	10K00 1% 0,6W
3934			4822 051 10102	1K00 2% 0,25W
3935			4822 051 10102	1K00 2% 0,25W
3936			4822 117 10837	100K 1% 0.1W
3937			4822 117 10833	10K 1% 0,1W

ELECTRICAL PARTSLIST - MONO BOARD

POS. NO	MODEL	VERS. COLOR	PART NO.	DESCRIPTION
3938			4822 117 11449	2K2 1% 0,1W
3939			4822 117 11449	2K2 1% 0,1W
3940			4822 117 11503	220R 1% 0.1W
3941			4822 117 11503	220R 1% 0.1W
3943	3000		4822 117 10833	10K 1% 0,1W
3943	4000		4822 051 20223	22K00 5% 0,1W
3944			4822 117 11503	220R 1% 0.1W
3945			4822 117 11503	220R 1% 0.1W
3946			4822 051 20471	470R00 5% 0,1W
3947			4822 051 20471	470R00 5% 0,1W
3948			4822 117 11503	220R 1% 0.1W
3949			4822 117 11503	220R 1% 0.1W
3950				
∫			4822 051 20101	100R00 5% 0,1W
3955				
				JUMPERS
4251			4822 051 20008	0R00 JUMP. (0805)
4252			4822 051 20008	0R00 JUMP. (0805)
4253	4000		4822 051 20008	0R00 JUMP. (0805)
4254				
∫			4822 051 20008	0R00 JUMP. (0805)
4258				
4259	3000		4822 051 20008	0R00 JUMP. (0805)
4260			4822 051 20008	0R00 JUMP. (0805)
4283				
∫			4822 051 20008	0R00 JUMP. (0805)
4285				
4287			4822 051 20008	0R00 JUMP. (0805)
4320			4822 051 20008	0R00 JUMP. (0805)
4501				
∫			4822 051 20008	0R00 JUMP. (0805)
4503				
4504	4000		4822 051 20008	0R00 JUMP. (0805)
4506			4822 051 20008	0R00 JUMP. (0805)
4512	3000		4822 051 20008	0R00 JUMP. (0805)
4513				
∫			4822 051 20008	0R00 JUMP. (0805)
4524				
4526			4822 051 20008	0R00 JUMP. (0805)
4528				
∫			4822 051 20008	0R00 JUMP. (0805)
4533				
4537				
∫			4822 051 20008	0R00 JUMP. (0805)
4545				
4548			4822 051 20008	0R00 JUMP. (0805)
4550				
∫			4822 051 20008	0R00 JUMP. (0805)
4553				
4555				
∫			4822 051 20008	0R00 JUMP. (0805)
4560				
4563			4822 051 20008	0R00 JUMP. (0805)
4564			4822 051 20008	0R00 JUMP. (0805)
4565	4000		4822 051 20008	0R00 JUMP. (0805)
4566	4000		4822 051 20008	0R00 JUMP. (0805)
4641	3000		4822 051 20008	0R00 JUMP. (0805)
4642	4000		4822 051 20008	0R00 JUMP. (0805)
4644	4000		4822 051 20008	0R00 JUMP. (0805)
4651			4822 051 20008	0R00 JUMP. (0805)
4652			4822 051 20008	0R00 JUMP. (0805)
4653	4000		4822 051 20008	0R00 JUMP. (0805)
4801				
∫			4822 051 20008	0R00 JUMP. (0805)
4805				
4832			4822 051 20008	0R00 JUMP. (0805)
4833			4822 051 20008	0R00 JUMP. (0805)
4835			4822 051 20008	0R00 JUMP. (0805)
4901	3000		4822 051 20008	0R00 JUMP. (0805)
4902				
∫			4822 051 20008	0R00 JUMP. (0805)
4905				
4911			4822 051 20008	0R00 JUMP. (0805)

POS. NO	MODEL	VERS. COLOR	PART NO.	DESCRIPTION
4913	4000		4822 051 20008	0R00 JUMP. (0805)
4914				
∫			4822 051 20008	0R00 JUMP. (0805)
4918				
				FILTERS
5301	4000		4822 157 70599	COIL
5302	3000		4822 157 62255	COIL
5303	4000		4822 157 70599	COIL
5304	3000		4822 157 62255	COIL
5305	4000		4822 157 70599	COIL
5306	3000		4822 157 62255	COIL
5901			4822 157 62255	COIL
5902			4822 157 62255	COIL
				DIODES
▲ 6252			4822 130 82079	D3SBA20
▲ 6253			4822 130 82078	D5SBA20
6257				
∫			4822 130 31878	1N4003G
6259				
6260			4822 209 33575	L7812CP
6261				
∫			4822 130 31878	1N4003G
6263				
6265			4822 209 31841	L7805CP
6267			4822 209 31841	L7805CP
6268			4822 130 31878	1N4003G
6270			4822 130 34278	BZX79-B6V8
6271			4822 130 30621	1N4148
6274	3000		4822 130 31878	1N4003G
6275	3000		4822 130 31878	1N4003G
6276			4822 130 34173	BZX79-B5V6
6279			4822 130 30621	1N4148
6280	3000		4822 130 34281	BZX79-B15
6280	4000		4822 130 61219	BZX79-B10
6281	3000		4822 130 34281	BZX79-B15
6281	4000		4822 130 34441	BZX79-B22
6289			4822 130 30621	1N4148
6290			4822 130 30621	1N4148
6301	4000		4822 130 34382	BZX79-B8V2
6302	4000		4822 130 34382	BZX79-B8V2
6303			4822 130 30621	1N4148
6304			5322 130 31504	BZX79-B3V3
6305			4822 130 30621	1N4148
6501			4822 130 30621	1N4148
6601			4822 130 30621	1N4148
6602			4822 130 30621	1N4148
6641				
∫			4822 130 30621	1N4148
6648				
6649			4822 130 31878	1N4003G
6650			4822 130 61219	BZX79-B10
6801				
∫			4822 130 34278	BZX79-B6V8
6808				
6809			4822 130 30621	1N4148
6831			4822 130 30621	1N4148
6832			4822 130 30621	1N4148
6901			4822 130 30621	1N4148
6902			4822 130 30621	1N4148
6903			5322 130 31504	BZX79-B3V3
6904			4822 130 30621	1N4148
				TRANSISITORS
7253			4822 130 60511	BC847B
7255			4822 130 60373	BC856B
7256			4822 130 60511	BC847B
7257			4822 130 41246	BC327-25
7258			4822 130 41246	BC327-25
7259			4822 130 60511	BC847B
7260	3000		4822 130 60511	BC847B
7260	4000		5322 130 60159	BC846B
7261			4822 130 60373	BC856B

ELECTRICAL PARTSLIST - MONO BOARD

POS. NO	MODEL	VERS. COLOR	PART NO.	DESCRIPTION
7301	3000		4822 209 17447	STK496-270
7302	4000		4822 209 17507	STK496-630
7304			4822 130 60511	BC847B
7305	3000		4822 130 60511	BC847B
7305	4000		5322 130 60159	BC846B
7306	3000		4822 130 60511	BC847B
7306	4000		5322 130 60159	BC846B
7307	3000		4822 130 60511	BC847B
7307	4000		5322 130 60159	BC846B
7309			4822 130 60373	BC856B
7310			4822 130 60511	BC847B
7501			4822 209 72748	LC7821
7503			4822 209 83357	NJM4560M JRC
7504	4000		4822 209 83357	NJM4560M JRC
7571	4000		4822 209 70157	NJM4560DD
7572	4000		4822 209 72748	LC7821
7601			4822 209 31378	NJM4556MB
7621			4822 130 42615	BC817-40
7622			4822 130 42615	BC817-40
7641 ∫ 7643			4822 209 17386	TDA7437T
7644			4822 130 40855	BC337
7651 ∫ 7656			4822 130 42615	BC817-40
7657			4822 130 60373	BC856B
7658			4822 130 60373	BC856B
7660			4822 209 83357	NJM4560M JRC
7661			4822 130 42615	BC817-40
7662			4822 130 42615	BC817-40
7801			4822 130 60511	BC847B
7802			4822 130 44568	BC557B
7803			4822 209 16886	STV6401
7901	3000		4822 209 17448	STK496-040B
7901	4000		4822 209 17385	STK496-070
7902 ∫ 7904			4822 130 60511	BC847B
7906			4822 130 60373	BC856B
7908			4822 130 60373	BC856B
7909			4822 130 60511	BC847B
7910			9322 139 22687	BD242BFP